CUSHMAN™

TECHNICIAN'S REPAIR AND SERVICE MANUAL

GASOLINE POWERED UTILITY VEHICLE

625611

ISSUED MARCH 2012 REVISED JUNE 2014

SAFETY

For any questions on material contained in this manual, contact an authorized representative for clarification.

Read and understand all labels located on the vehicle. Always replace any damaged or missing labels.

On steep hills it is possible for vehicles to coast at greater than normal speeds encountered on a flat surface. To prevent loss of vehicle control and possible serious injury, speeds should be limited to no more than the maximum speed on level ground. See GENERAL SPECIFICATIONS. Limit speed by applying the service brake.

Catastrophic damage to the drivetrain components due to excessive speed may result from driving the vehicle above specified speed. Damage caused by excessive speed may cause a loss of vehicle control, is costly, is considered abuse and will not be covered under warranty.

For towing/transporting vehicle, refer to “TRANSPORTING VEHICLE”.

Signs similar to the ones illustrated should be used to warn of situations that could result in an unsafe condition.

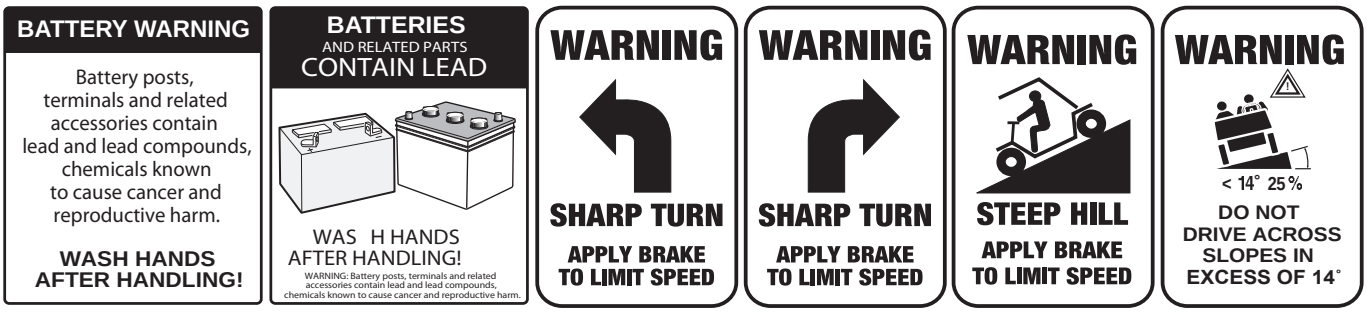

Be sure that this manual remains as part of the permanent service record should the vehicle be sold. Throughout this guide **NOTICES**, **CAUTION** and **WARNING** and will be used.

Observe these **NOTICES**, **CAUTIONS** and **WARNINGS**; be aware that servicing a vehicle requires mechanical skill and a regard for conditions that could be hazardous. Improper service or repair may damage the vehicle or render it unsafe.

NOTICE

A **NOTICE** *indicates a condition that should be observed.*

⚠ CAUTION

Indicates a hazardous situation which, if not avoided, could result in minor or moderate injury.

⚠ WARNING

Indicates a hazardous situation which, if not avoided, could result in death or serious injury.

⚠ DANGER

Indicates a hazardous situation which, if not avoided, will result in death or serious injury.

⚠ WARNING

Engine exhaust from this product contains chemicals known, in certain quantities, to cause cancer, birth defects, or other reproductive harm.

NOTICE

The exhaust emissions of this vehicles’ engine complies with regulations set forth by the Environmental Protection Agency (EPA) of the United States of America (USA) at time of manufacture.Significant fines could result from modifications or tampering with the engine, fuel, ignition or air intake systems.

⚠ WARNING

Battery posts, terminals and related accessories contain lead and lead compounds. Wash hands after handling.

NOTICE

This spark ignition system meets all requirements of the Canadian Interference-Causing Equipment Regulations.

Ce système d'allumage par étincelle de véhicule respecte toutes les exigences du Règlement sur le matériel brouilleur du Canada.

(NOTICES, CAUTIONS AND WARNINGS CONTINUED ON INSIDE OF BACK COVER)

SERVICE AND REPAIR MANUAL

GASOLINE POWERED UTILITY VEHICLES

SHUTTLE 2

SHUTTLE 4

SHUTTLE 6

REFRESHER 2000

STARTING MODEL YEAR 2012

DISCLAIMER: The E-Z-GO Division of Textron Inc. (E-Z-GO) reserves the right to incorporate engineering and design changes to products in this Manual, without obligation to include these changes on units leased/sold previously.
The information contained in this Manual may be revised periodically E-Z-GO, and therefore is subject to change without notice.
E-Z-GO DISCLAIMS LIABLITY FOR ERRORS IN THIS MANUAL, and E-Z-GO SPECIFICALLY DISCLAIMS LIABILITY FOR INCIDENTAL AND CONSEQUENTIAL DAMAGES RESULTING FROM THE USE OF THE INFORMATION AND MATERIALS IN THIS MANUAL.

TO CONTACT US

NORTH AMERICA:

TECHNICAL ASSISTANCE & WARRANTY PHONE: 1-800-774-3946, FAX: 1-800-448-8124

SERVICE PARTS PHONE: 1-888-GET-EZGO (1-888-438-3946), FAX: 1-800-752-6175

INTERNATIONAL: PHONE: 001-706-798-4311, FAX: 001-706-771-4609

GENERAL INFORMATION

This vehicle has been designed and manufactured in the United States of America (USA) as a 'World Vehicle'. The Standards and Specifications listed in the following text originate in the USA unless otherwise indicated.

The use of non Original Equipment Manufacturer (OEM) approved parts may void the warranty.

Overfilling batteries may void the warranty.

BATTERY PROLONGED STORAGE

All batteries will self discharge over time. The rate of self discharge varies depending on the ambient temperature and the age and condition of the batteries.

A fully charged battery will not freeze in winter temperatures unless the temperature falls below -75° F (-60° C).

For winter storage, the batteries must be clean, fully charged and disconnected from any source of electrical drain. The battery charger and the controller are both sources of electrical drain. Unplug the battery charger DC plug from the vehicle receptacle.

As with all electric vehicles, the batteries must be checked and recharged as required or at a minimum of 30 day intervals.

BATTERY DISPOSAL

Lead-acid batteries are recyclable. Return whole scrap batteries to distributor, manufacturer or lead smelter for recycling. For neutralized spills, place residue in acid-resistant containers with absorbent material, sand or earth and dispose of in accordance with local, state and federal regulations for acid and lead compounds. Contact local and/or state environmental officials regarding disposal information

TABLE OF CONTENTS

TITLE	PAGE
SAFETY	INSIDE COVERS
GENERAL INFORMATION	II
SAFETY INFORMATION	V

TITLE	SECTION
GENERAL INFORMATION & ROUTINE MAINTENANCE	A
SAFETY	B
BODY	C
WHEELS AND TIRES	D
FRONT SUSPENSION AND STEERING	E
SPEED CONTROL	F
ENGINE	G
FUEL SYSTEM	H
CONTINUOUSLY VARIABLE TRANSMISSION (CVT)	J
DIRECTION SELECTOR	K
ELECTRICAL WIRING	L
MECHANICAL BRAKES (Shuttle)	M
FRONT HYDRAULIC DISC BRAKES (Shuttle)	N
HYDRAULIC BRAKES (REFRESHER 2000)	P
REAR SUSPENSION	Q
REAR AXLE	R
REFRESHER UNIT	S
TROUBLESHOOTING	T
GENERAL SPECIFICATIONS	V

NOTES:

SAFETY INFORMATION

Read all of Section B and this section before attempting any procedure. Pay particular attention to Notices, Cautions, Warnings and Dangers.

This manual has been designed to assist in maintaining the vehicle in accordance with procedures developed by the manufacturer. Adherence to these procedures and troubleshooting tips will ensure the best possible service from the product. To reduce the chance of personal injury or property damage, the following must be carefully observed:

⚠ CAUTION

Certain replacement parts can be used independently and/or in combination with other accessories to modify an E-Z-GO-manufactured vehicle to permit the vehicle to operate at or in excess of 20mph. When an E-Z-GO-manufactured vehicle is modified in any way by the Distributor, Dealer or customer to operate at or in excess of 20mph, UNDER FEDERAL LAW the modified product will be a Low Speed Vehicle (LSV) subject to the strictures and requirements of Federal Motor Vehicle Safety Standard 571.500. In these instances, pursuant to Federal law the Distributor or Dealer MUST equip the product with headlights, rear lights, turn signals, seat belts, top, horn and all other modifications for LSV's mandated in FMVSS 571.500, and affix a Vehicle Identification Number to the product in accordance with the requirements of FMVSS 571.565. Pursuant to FMVSS 571.500, and in accordance with the State laws applicable in the places of sale and use of the product, the Distributor, Dealer or customer modifying the vehicle also will be the Final Vehicle Manufacturer for the LSV, and required to title or register the vehicle as mandated by State law.

E-Z-GO will NOT approve Distributor, Dealer or customer modifications converting E-Z-GO products into LSV's.

The Company, in addition, recommends that all E-Z-GO products sold as personal transportation vehicles BE OPERATED ONLY BY PERSONS WITH VALID DRIVERS LICENSES, AND IN ACCORDANCE WITH APPLICABLE STATE REQUIREMENTS. This restriction is important to the SAFE USE AND OPERATION of the product.

Information on FMVSS 571.500 can be obtained at Title 49 of the Code of Federal Regulations, section 571.500, or through the Internet at the website for the U.S. Department of Transportation - at Dockets and Regulation, then to Title 49 of the Code of Federal Regulations (Transportation).

GENERAL

Many vehicles are used for a variety of tasks beyond the original intended use of the vehicle; therefore, it is impossible to anticipate and warn against every possible combination of circumstances that may occur. No warnings can take the place of good common sense and prudent driving practices.

Good common sense and prudent driving practices do more to prevent accidents and injury than all of the warnings and instructions combined. The manufacturer strongly suggests that all users and maintenance personnel read this entire manual paying particular attention to the CAUTIONS and WARNINGS contained therein.

If you have any questions regarding this vehicle, contact your closest representative or write to the address on the back cover of this publication, Attention: Product Service Department.

The manufacturer reserves the right to make design changes without obligation to make these changes on units previously sold and the information contained in this manual is subject to change without notice.

The manufacturer is not liable for errors in this manual or for incidental or consequential damages that result from the use of the material in this manual.

This vehicle conforms to the current applicable standard(s) for safety and performance requirements.

These vehicles are designed and manufactured for off-road use. They do not conform to Federal Motor Vehicle Safety Standards of the United States of America (USA) and are not equipped for operation on public streets. Some communities may permit these vehicles to be operated on their streets on a limited basis and in accordance with local ordinances.

Refer to GENERAL SPECIFICATIONS for vehicle seating capacity.

SAFETY INFORMATION

Read all of Section B and this section before attempting any procedure. Pay particular attention to Notices, Cautions, Warnings and Dangers.

Never modify the vehicle in any way that will alter the weight distribution of the vehicle, decrease its stability or increase the speed beyond the factory specification. Such modifications can cause serious personal injury or death. Modifications that increase the speed and/or weight of the vehicle will extend the stopping distance and may reduce the stability of the vehicle. Do not make any such modifications or changes. The manufacturer prohibits and disclaims responsibility for any such modifications or any other alteration which would adversely affect the safety of the vehicle.

Vehicles that are capable of higher speeds must limit their speed to no more than the speed of other vehicles when used in a golf course environment. Additionally, speed should be further moderated by the environmental conditions, terrain and common sense.

GENERAL OPERATION

Always:

- Use the vehicle in a responsible manner and maintain the vehicle in safe operating condition.
- Read and observe all warnings and operation instruction labels affixed to the vehicle.
- Follow all safety rules established in the area where the vehicle is being operated.
- Reduce speed to compensate for poor terrain or conditions.
- Apply service brake to control speed on steep grades.
- Maintain adequate distance between vehicles.
- Reduce speed in wet areas.
- Use extreme caution when approaching sharp or blind turns.
- Use extreme caution when driving over loose terrain.
- Use extreme caution in areas where pedestrians are present.

MAINTENANCE

Always:

- Maintain the vehicle in accordance with the manufacturer’s periodic service schedule.
- Ensure that repairs are performed by those that are trained and qualified to do so.
- Follow the manufacturer’s maintenance procedures for the vehicle. Be sure to disable the vehicle before performing any maintenance. Disabling includes removing the key from the key switch and removal of a battery wire.
- Insulate any tools used within the battery area in order to prevent sparks or battery explosion caused by shorting the battery terminals or associated wiring. Remove the battery or cover exposed terminals with an insulating material.
- Use specified replacement parts. Never use replacement parts of lesser quality.
- Use recommended tools.
- Determine that tools and procedures not specifically recommended by the manufacturer will not compromise the safety of personnel nor jeopardize the safe operation of the vehicle.
- Support the vehicle using wheel chocks and jack stands. Never get under a vehicle that is supported by a jack. Lift the vehicle in accordance with the manufacturer’s instructions.
- Empty the fuel tank or plug fuel hoses to prevent fuel leakage.
- Maintain the vehicle in an area away from exposed flame or persons who are smoking.

SAFETY INFORMATION

Read all of Section B and this section before attempting any procedure. Pay particular attention to Notices, Cautions, Warnings and Dangers.

- Be aware that a vehicle that is not performing as designed is a potential hazard and must not be operated.
- Test drive the vehicle after any repairs or maintenance. All tests must be conducted in a safe area that is free of both vehicular and pedestrian traffic.
- Replace damaged or missing warning, caution or information labels.
- Keep complete records of the maintenance history of the vehicle.

The manufacturer cannot anticipate all situations, therefore people attempting to maintain or repair the vehicle must have the skill and experience to recognize and protect themselves from potential situations that could result in severe personal injury or death and damage to the vehicle. Use extreme caution and, if unsure as to the potential for injury, refer the repair or maintenance to a qualified mechanic.

VENTILATION

Always store gasoline vehicles in a well ventilated area. Ventilation prevents gasoline fumes from accumulating.

Never fuel a vehicle in an area that is subject to flame or spark. Pay particular attention to natural gas or propane water heaters and furnaces.

Never work around or operate a vehicle in an environment that does not ventilate exhaust gases from the area. Carbon monoxide is a dangerous gas that can cause unconsciousness and is potentially lethal.

Read all of Section B and this section before attempting any procedure. Pay particular attention to Notices, Cautions, Warnings and Dangers.

NOTES:

TABLE OF CONTENTS FOR SECTION 'A'

SECTION TITLE **PAGE NO.**

SERIAL NUMBER LOCATION ..... **A - 1**

STARTING THE VEHICLE WITH A DISCHARGED BATTERY ..... **A - 1**

SERVICING THE VEHICLE ..... **A - 1**

FUEL ..... **A - 2**

TOWING ..... **A - 2**

ROUTINE MAINTENANCE ..... **A - 3**

POWERTRAIN MAINTENANCE ..... **A - 3**

BRAKES ..... **A - 4**

TIRES ..... **A - 4**

TRAILERING ..... **A - 4**

TOP AND WINDSHIELD ..... **A - 4**

WINTER OR PROLONGED STORAGE ..... **A - 4**

CARE AND CLEANING OF THE VEHICLE ..... **A - 5**

VEHICLE CARE PRODUCTS ..... **A - 5**

HARDWARE ..... **A - 5**

TORQUE SPECIFICATIONS ..... **A - 6**

PERIODIC SERVICE SCHEDULE ..... **A - 7**

LIST OF ILLUSTRATIONS

Fig. 1 Serial Number Location ..... A - 1
Fig. 2 Initial Service Chart ..... A - 2
Fig. 3 Fuel Tank ..... A - 2
Fig. 4 Neutral Lock ..... A - 3
Fig. 5 Lubrication Points ..... A - 3
Fig. 6 Torque Specifications ..... A - 6
Fig. 7 Periodic Service Schedule ..... A - 7

Read all of Section B and this section before attempting any procedure. Pay particular attention to Notices, Cautions, Warnings and Dangers.

NOTES:

Read all of Section B and this section before attempting any procedure. Pay particular attention to Notices, Cautions, Warnings and Dangers.

SERIAL NUMBER LOCATION

Two serial number and manufacture date code labels are on the vehicle. One is on the body below the front, driver side of the seat. The other two are located on the chassis under the seat. The serial number is also engraved on the flat portion of the frame rail.

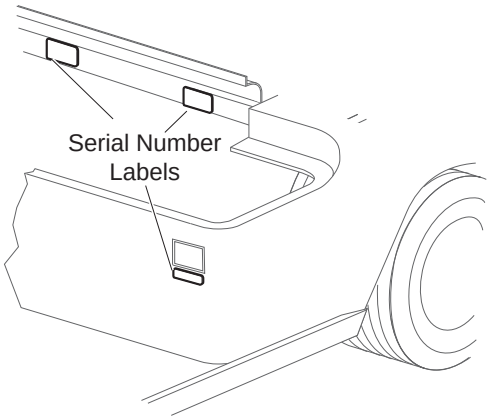

Fig. 1 Serial Number Location

Design changes take place on an ongoing basis. In order to obtain correct components for the vehicle, the manufacture date code, serial number and vehicle model must be provided when ordering service parts.

STARTING THE VEHICLE WITH A DISCHARGED BATTERY

⚠ WARNING

Do not attempt to 'jump start' a vehicle using another vehicle.

The vehicle is equipped with a starter/generator. When starting the engine, the starter/generator functions as a starter and with the engine running, it functions as a generator.

With the short running times associated with this kind of vehicle, the generator is more than adequate to maintain the battery charge level. The generator is not designed to charge a discharged battery.

Since the engine stops when the accelerator is released, **jump starting should not be attempted**.

If the vehicle is equipped with lights and/or accessories that are used when the vehicle is not in motion, the starter/generator may not be adequate to maintain battery charge. In this situation, the battery may require charging with a 12V 10 amp max charger.

Observe all instructions provided by the manufacturer of the charger.

SERVICING THE VEHICLE

⚠ WARNING

To prevent severe injury or death, resulting from improper servicing techniques, observe the following Warnings:

Do not attempt any type of servicing operations before reading and understanding all notes, cautions and warnings in this manual.

Any servicing requiring adjustments to be made to the powertrain while the motor is running must be made with both drive wheels raised.

Wear eye protection when working on the vehicle. In particular, use care when working around batteries, or using solvents or compressed air.

To reduce the possibility of causing an electrical arc, which could result in a battery explosion, turn off all electrical loads from the batteries before removing any heavy gauge battery wires.

To prevent the possibility of motor disintegration, never operate vehicle at full throttle for more than 4 - 5 seconds while vehicle is in a "no load" condition.

It is in the best interest of both vehicle owner and servicing dealer, to carefully follow the procedures recommended in this manual. Adequate preventative maintenance, applied at regular intervals, is the best guarantee for keeping the vehicle both dependable and economical.

In any product, components will eventually fail to perform properly as the result of normal use, age, wear or abuse.

It is virtually impossible to anticipate all possible component failures or the manner in which each component may fail.

A vehicle requiring repair indicates the vehicle is no longer functioning as designed and should be considered potentially hazardous. Use extreme care when working on a vehicle. When diagnosing, removing or replacing any components that are not operating properly, con-

Read all of Section B and this section before attempting any procedure. Pay particular attention to Notices, Cautions, Warnings and Dangers.

sider the safety of yourself and those around you, should the component move unexpectedly.

Some components are heavy, spring loaded, highly corrosive, explosive, may produce amperage or reach high temperatures. Gasoline, carbon monoxide, battery acid and hydrogen gas could result in serious bodily injury to the technician/mechanic and bystanders, if not treated with the utmost caution. Be careful not to place hands, face, feet or body in a location that could expose them to injury should an unforeseen dangerous situation occur.

Always use the appropriate tools listed in the tool list and wear approved safety equipment.

Before a new vehicle is put into operation, it is recommended the items shown in the INITIAL SERVICE CHART be performed.

ITEM	SERVICE OPERATION
Battery	Charge battery
Seats	Remove protective plastic covering
Brakes	Check operation and adjust if necessary
	Establish new vehicle braking distance
Tires	Check pressure
Fuel	Fill tank with correct fuel
Engine	Check oil level

Fig. 2 Initial Service Chart

FUEL

The fuel tank is located under the seat, on the passenger side of the vehicle. Fill tank with fresh, clean, automotive grade, unleaded, 87 octane (minimum) gasoline. Heavy use/load applications may benefit from higher octane gasoline.

CAUTION

DO NOT over fill the fuel tank. Allow adequate space for the expansion of gasoline. Leave at least 1" (2.5 cm) of space below the bottom of the filler neck.

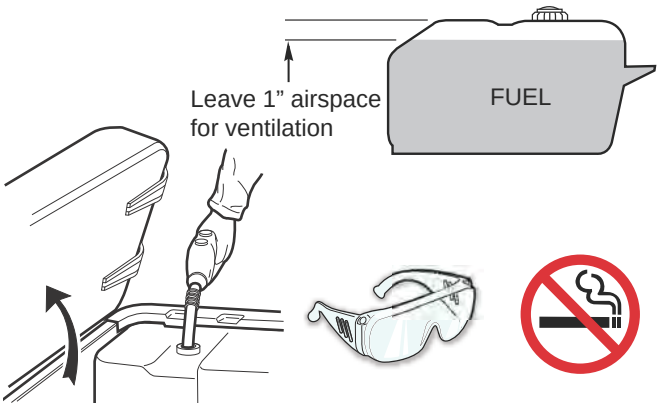

Fig. 3 Fuel Tank

WARNING

When refueling, inspect the fuel tank cap for leaks or breaks in the housing that could result in fuel spillage.

To prevent a possible explosion, do not smoke near the fuel tank or refuel near open fire or electrical items which could produce a spark.

Always wear safety glasses while refueling to prevent possible injury from gasoline or gasoline vapor.

Do not handle fuel in an area that is not adequately ventilated. Do not permit anyone to smoke in an area where vehicles are being fueled.

TOWING

WARNING

To prevent personal injury, do not ride on vehicle being towed. Do not attempt to tow the vehicle with ropes, chains or any device other than a factory approved tow bar. Towing a disabled vehicle can be dangerous and requires extra caution. Attempting to tow with devices other than an approved tow bar may result in severe personal injury or death.

CAUTION

Place direction selector in neutral. The neutral lock should be used to lock the direction selector in position. This will reduce the possibility of it moving into ‘F’ (forward) or ‘R’ (reverse) while being towed, causing possible damage to the rear axle.

Read all of Section B and this section before attempting any procedure. Pay particular attention to Notices, Cautions, Warnings and Dangers.

Use extra caution when towing vehicle. Do not tow a single vehicle at speeds in excess of 12 mph (19 kph). Towing the vehicle at above recommended speed may result in personal injury and/or damage to vehicle and other property.

To operate neutral lock, first turn the key switch to 'OFF', place direction selector in 'R' and remove seat. Pull out (1) and rotate (2) the neutral lock pin handle so that the pointed portion of the handle is over the side of the direction selector cam. Move direction selector lever towards the area between 'F' and 'R'. During that motion, the pin will snap into the hole in the direction selector mounting bracket, preventing any movement of the lever. When in this position, the direction selector remains locked in the neutral position.

WARNING

Spring loaded mechanism. To prevent possibility of fingers becoming pinched in the direction selector mechanism, hold direction selector lever when releasing neutral lock pin handle.

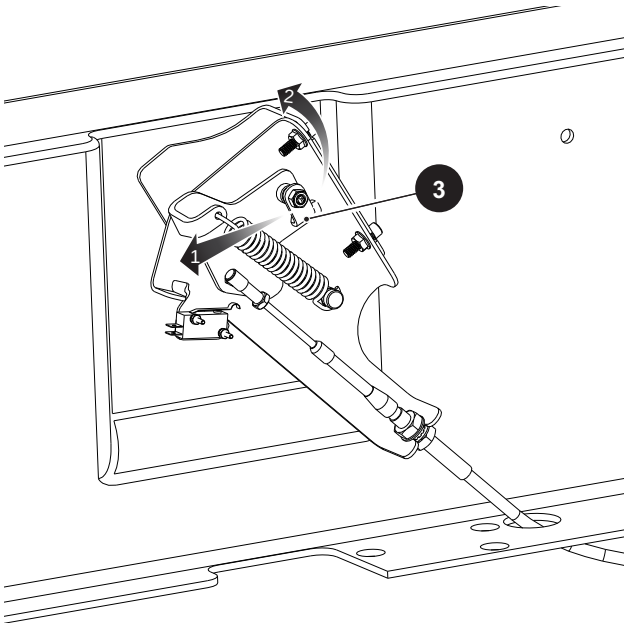

Fig. 4 Neutral Lock

To activate the direction selector, pull the neutral lock pin handle out and rotate until the pointed portion of the handle fits into the hole (3) in the direction selector cam

ROUTINE MAINTENANCE

This vehicle will give years of satisfactory service, providing it receives regular maintenance. Refer to the Periodic Service Schedule for appropriate service intervals (Ref. Fig. 7).

NOTICE

Some maintenance items must be serviced more frequently on vehicles used under severe driving conditions.

Periodic lubrication of the steering is recommended.

CAUTION

Do not use more than three pumps of grease in each grease fitting at any one time. Excess grease may cause grease seals to fail or grease migration into areas that could damage components.

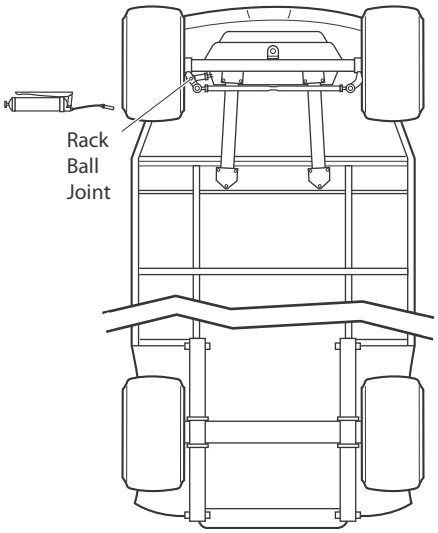

View from Underside of Vehicle

Fig. 5 Lubrication Points

POWERTRAIN MAINTENANCE

Access the powertrain by raising or removing the last forward facing seat bottom. Some service procedures may require the vehicle be lifted. Refer to LIFTING THE VEHICLE in section 'B' for proper lifting procedure and safety information.

For maintenance procedures relating to the engine, speed control, fuel system, transmission, and rear axle or suspension refer to the particular section. See the TABLE OF CONTENTS for section location.

Read all of Section B and this section before attempting any procedure. Pay particular attention to Notices, Cautions, Warnings and Dangers.

BRAKES

After the vehicle has been put into service, it is recommended that the brakes be checked by periodically conducting a brake performance test.

WARNING

To prevent severe injury or death resulting from operating a vehicle with improperly operating brake system, the braking system must be properly maintained. All driving brake tests must be done in a safe location with regard for the safety of all personnel

NOTICE

Over time, a subtle loss of performance may take place. Therefore, it is important to establish the standard with a new vehicle.

For test method and brake service, refer to MECHANICAL BRAKES section.

TIRES

Tire condition should be inspected on a daily basis. Inflation pressures should be checked on a weekly basis when the tires are cool. Be sure to reinstall valve dust cap after checking or inflating tire. For additional information, refer to WHEELS AND TIRES section.

TRAILERING

WARNING

To prevent personal injury to occupants of other highway vehicles, be sure that the vehicle and contents are adequately secured to trailer.

Do not ride on vehicle being trailered.

Remove windshield before trailering.

Maximum speed with top is 50 mph (80 kph).

If the vehicle is to be transported on a trailer at highway speeds, the windshield and top must be removed and the seat bottom secured. Always check that the vehicle and contents are adequately secured before trailering the vehicle. The rated capacity of the trailer must exceed the weight of the vehicle (see GENERAL SPECIFICATIONS for vehicle weight) and load. Lock the parking brake and secure the vehicle to the trailer using ratchet tie downs.

TOP AND WINDSHIELD

WARNING

The top does not provide protection from roll over or falling objects.The windshield does not provide protection from tree limbs or flying objects.

Clean with lots of water and a clean cloth. Minor scratches may be removed using a commercial plastic polish or Plexus plastic cleaner.

WINTER OR PROLONGED STORAGE

WARNING

To reduce the possibility of severe injury or death resulting from a possible explosion:

Do not handle fuel in an area that is not adequately ventilated. Do not smoke near the fuel tank or refuel near open flame or electrical items which could produce a spark.

Store vehicle in a clean, dry area. Do not store in same area as a stove, furnace, water heater, or other appliance that uses a pilot light or has a device that can create a spark.

When refueling, inspect the fuel cap for leaks or breaks that could result in fuel spillage.

Always wear safety glasses while refueling to prevent possible eye injury from gasoline or gasoline vapour.

Keep hands, clothing and jewelry away from moving parts. Use care not to contact hot objects. Raise the rear of the vehicle and support on jack stands before attempting to run the engine.

Preparing the engine for a prolonged storage period (30 days or more) calls for a few simple steps to prevent build up of varnish and gum in the carburetor and corrosion in the engine.

- Turn the Key Switch to OFF position, and leave the Forward/Reverse switch in the NEUTRAL position during storage.
- Perform all required routine maintenance per the Periodic Service Schedule.

Read all of Section B and this section before attempting any procedure. Pay particular attention to Notices, Cautions, Warnings and Dangers.

- Properly inflate the tires to recommended pressure (psi) stated on sidewall of ires.
- Place the Forward/Reverse handle in the NEUTRAL position and engage the neutral lock (Ref. Fig. 4).
- Turn the Fuel Shut-Off Valve to the closed (OFF) position.
- With proper ventilation, run engine until the remaining fuel in carburetor and fuel lines is depleted and the engine stalls.
- Return the neutral lock to the OPERATE position.
- Loosen, but do not remove the carburetor drain screw. Drain any fuel remaining in bowl into an approved container and pour the fuel collected into the vehicle fuel tank. Add Sea Foam (4 oz. for a full tank of fuel) to stabilize fuel and install the tank cap securely.
- Tighten the carburetor drain screw.
- Remove spark plug and pour about 1/2 oz. (15 ml) of SAE 10 - 30 weight oil or Fogging oil into the cylinder.
- Do not engage the park brake, but secure the car from rolling.
- While engine is still warm, change oil.
- Clean body, chassis and engine of debris, mud, chaff or grass.

CARE AND CLEANING OF THE VEHICLE

CAUTION

When pressure washing vehicle, do not use pressure in excess of 700 psi (48.26 bar). To prevent cosmetic damage, do not use any abrasive or reactive solvents to clean plastic parts.

It is important that proper techniques and cleaning materials be used.

Normal cleaning of vinyl seats and plastic or rubber trim requires the use of a mild soap solution applied with a sponge or soft brush and wipe with a damp cloth.

Removal of oil, tar, asphalt, shoe polish, etc. will require the use of a commercially available vinyl/rubber cleaner.

The painted surfaces of the vehicle provide attractive appearance and durable protection. Frequent washing with lukewarm or cold water is the best method of preserving the painted surfaces.

Do not use hot water, strong soap or harsh chemical detergents.

Rubber parts should be cleaned with non-abrasive household cleaner.

Occasional cleaning and waxing with non-abrasive products designed for ‘clear coat’ automotive finishes will enhance the appearance and durability of the painted surfaces.

Corrosive materials used as fertilizers or for dust control can collect on the underbody of the vehicle. These materials could cause corrosion of underbody parts. It is recommended that the underbody be flushed occasionally with plain water. Thoroughly clean any areas where mud or other debris can collect. Sediment packed in closed areas should be loosened to ease it’s removal, taking care not to chip or otherwise damage paint.

NOTICE

If the engine does not start or runs improperly after washing, remove the spark plug wire (by pulling the spark plug boots, never the wires) and blow them dry. Reinstall the wires. Remove moisture from coil by blowing across top.

VEHICLE CARE PRODUCTS

To help maintain the vehicle, the manufacturer has several products, available through a local Distributor, an authorized Branch, or the Service Parts Department, among them are

- Touch-up paint specially formulated to match vehicle colors for use on both metal and TPE (plastic) bodies. (P/N 28432-G**)
- Multi-purpose Battery Protectant formulated to form a long-term, flexible, non-tacky, dry coating that will not crack, peel or flake over a wide temperature range. (P/N 606312)
- Multi-purpose Hand Cleaner is an industrial strength cleaner containing no harsh solvents, yet gently lifts grease off hands. May be used with or without water. (P/N 607636)
- Plexus plastic cleaner and polish removes minor scratches from windshield. (P/N 606314)

HARDWARE

Periodically the vehicle should be inspected for loose fasteners. Fasteners should be tightened in accordance with the Torque Specifications table (Ref. Fig. 6). Use care when tightening fasteners and refer to the sections in this manual for specific torque values.

Generally, two grades of hardware are used in the vehicle. Grade 5 hardware can be identified by the three marks on the hexagonal head. Unmarked hardware is Grade 2 (Ref. Fig. 6).

Read all of Section B and this section before attempting any procedure. Pay particular attention to Notices, Cautions, Warnings and Dangers.

TORQUE SPECIFICATIONS

ALL TORQUE FIGURES ARE IN FT. LBS. (Nm)
Unless otherwise noted in text, tighten all hardware in accordance with this chart.
This chart specifies 'lubricated' torque figures. Fasteners that are plated or lubricated when installed are considered 'wet' and require approximately 80% of the torque required for 'dry' fasteners.

BOLT SIZE	1/4"	5/16"	3/8"	7/16"	1/2"	9/16"	5/8"	3/4"	7/8"	1"
Grade 2	4 (5)	8 (11)	15 (20)	24 (33)	35 (47)	55 (75)	75 (102)	130 (176)	125 (169)	190 (258)
Grade 5	6 (8)	13 (18)	23 (31)	35 (47)	55 (75)	80 (108)	110 (149)	200 (271)	320 (434)	480 (651)
Grade 8	6 (8)	18 (24)	35 (47)	55 (75)	80 (108)	110 (149)	170 (230)	280 (380)	460 (624)	680 (922)

BOLT SIZE	M4	M5	M6	M8	M10	M12	M14			
Class 5.8 (Grade 2) 5.8	1 (2)	2 (3)	4 (6)	10 (14)	20 (27)	35 (47)	55 (76.4)			
Class 8.8 (Grade 5) 8.8	2 (3)	4 (6)	7 (10)	18 (24)	35 (47)	61 (83)	97 (131)			
Class 10.9 (Grade 8) 10.9	3 (4)	6 (8)	10 (14)	25 (34)	49 (66)	86 (117)	136 (184)			

Fig. 6 Torque Specifications

Read all of Section B and this section before attempting any procedure. Pay particular attention to Notices, Cautions, Warnings and Dangers.

PERIODIC SERVICE SCHEDULE

***** - CHECK **C&A** - CHECK & ADJUST **CL** - CLEAN **R** - REPLACE

REMARKS	before each use DAILY	WEEKLY	20 rnds/20 hrs 100 miles/160 kms MONTHLY	60 rnds/60 hrs 300 miles/500 kms QUARTERLY	125 rnds/125 hrs 600miles/1000 kms SEMI-ANNUAL	250 rnds/250 hrs 1200miles/2000 kms ANNUAL	5 YEARS	PAGE
Tires - pressure, condition of tires & rims	*	*	*	*	*	*		
Hardware - loose or missing	*	*	*	*	*	*		
Reverse Warning Indicator	*	*	*	*	*	*		
Overall Vehicle Condition	*	*	*	*	*	*		
Battery - state of charge, condition, loose terminals, corrosion, hold down & hardware	*	*	CL	CL	CL	CL		
Service Brake (Mechanical) - smooth operation	*	*	*	*	*	*		
Brakes - aggressive stop test			C&A	C&A	C&A	C&A		
Park Brake - operation, does it hold on a hill	*	*	C&A	C&A	C&A	C&A		
Accelerator - smooth operation	*	*	*	*	*	*		
Starter/Generator Belt - tension, wear, cracks		*	*	*	*	*		
Wiring - loose connections, broken or missing insulation			*	*	*	*		
Carburetor Linkage - attachment			C&A	C&A	C&A	C&A		
Carburetor						CL		
Direction Selector - attachment and mechanism			C&A	C&A	C&A	C&A		
Cooling Fan - build up of debris inside blower housing		C&A	C&A	C&A	C&A	C&A		
Engine Oil ** - oil level		C&A	C&A	C&A	C&A	C&A		
Engine Oil **& Filter - drain and change					R	R		
Engine - noise, vibration, acceleration, oil leaks			C&A	C&A	C&A	C&A		
Valves - check cold - Ref: Repair & Service Manual						C&A		
Cylinder Head & Pistons - remove carbon							CL	
Choke Cable - smooth movement & adjustment			C&A	C&A	C&A	C&A		
Cooling Fan - build-up of foreign matter inside housing & fins			CL	CL	CL	CL		

Fig. 7 PERIODIC SERVICE SCHEDULE

**Initial oil change after 8 hours of run time.

NOTE: Some maintenance items must be serviced more frequently on vehicles used under severe driving conditions.

Read all of Section B and this section before attempting any procedure. Pay particular attention to Notices, Cautions, Warnings and Dangers.

REMARKS	before each use DAILY	WEEKLY	20 rnds/20 hrs 100 miles/160 kms MONTHLY	60 rnds/60 hrs 300 miles/500 kms QUARTERLY	125 rnds/125 hrs 600miles/1000 kms SEMI-ANNUAL	250 rnds/250 hrs 1200miles/2000 kms ANNUAL	5 YEARS	PAGE
Steering Assembly - excessive play, loose or missing hardware			*	*	*	*		
Tie Rods - excessive play, bent rods, loose or missing hardware			*	*	*	*		
Rear Axle - fluid level, oil leakage, noise, loose or missing hardware			*	*	*	*		
Rear Axle - drain & replace fluid							R	
Rear Suspension - shock oil leakage, worn bushings, loose or missing hardware				*	*	*		
Front Suspension - strut oil leakage, excessive play in hubs or kingpins, worn bushings, loose or missing hardware			*	*	*	*		
Front Wheel Alignment - unusual tire wear				C&A	C&A	C&A		
Fuel System - leaks at tank, cap, system lines for cracks/deterioration, filters, pump				*	*	*		
Fuel Filter						R		
Spark Plug						R		
Throttle/Governor Linkage - operation & governed speed				*	*	*		
Air Filter Element - check & replace as necessary					*	*		
Drive Belt - cracks, frayed, excessive wear					*	*		

Fig. 7 PERIODIC SERVICE SCHEDULE

**Initial oil change after 8 hours of run time.

NOTE: Some maintenance items must be serviced more frequently on vehicles used under severe driving conditions.

Read all of Section B and this section before attempting any procedure. Pay particular attention to Notices, Cautions, Warnings and Dangers.

NOTES:

Read all of Section B and this section before attempting any procedure. Pay particular attention to Notices, Cautions, Warnings and Dangers.

NOTES:

TABLE OF CONTENTS FOR SECTION 'B'

SECTION TITLE **PAGE NO.**

NOTICES, CAUTIONS WARNINGS AND DANGERS ..... **B - 1**

IMPORTANT SAFETY WARNING ..... **B - 1**

MODIFICATIONS TO VEHICLE ..... **B - 1**

GENERAL MAINTENANCE ..... **B - 1**

BEFORE SERVICING THE VEHICLE ..... **B - 1**
Battery Removal and Installation ..... B - 2

LIFTING THE VEHICLE ..... **B - 3**

LIST OF ILLUSTRATIONS
Fig. 1 Battery Removal ..... B - 3
Fig. 2 Lifting the vehicle ..... B - 3

Read all of Section B and this section before attempting any procedure. Pay particular attention to Notices, Cautions, Warnings and Dangers.

NOTES:

Read all of Section B and this section before attempting any procedure. Pay particular attention to Notices, Cautions, Warnings and Dangers.

NOTICES, CAUTIONS WARNINGS AND DANGERS

Throughout this manual, the following **NOTICES, CAUTIONS**, **WARNINGS and DANGERS** are used. For the protection of all personnel and the vehicle, be aware of and observe the following:

NOTICE

A **NOTICE** indicates a condition that should be observed.

CAUTION

A CAUTION indicates a condition that may result in damage to the vehicle or surrounding facilities.

WARNING

A WARNING indicates a hazardous condition which could result in serious injury or death.

DANGER

Indicates a hazardous situation which, if not avoided, will result in death or serious injury.

IMPORTANT SAFETY WARNING

In any product, components will eventually fail to perform properly as the result of normal use, age, wear or abuse.

It is virtually impossible to anticipate all possible component failures or the manner in which each component may fail.

Be aware that a vehicle requiring repair indicates that the vehicle is no longer functioning as designed and therefore should be considered potentially hazardous. Use extreme care when working on any vehicle. When diagnosing, removing or replacing any components that are not operating correctly, take the time to consider the safety ramifications if the component should move unexpectedly.

Some components are heavy, spring loaded, highly corrosive, explosive or may produce high amperage or reach high temperatures. Gasoline, carbon monoxide, battery acid and hydrogen gas could result in serious bodily injury to the technician/mechanic and bystanders if not treated with utmost caution. Be careful not to place hands, face, feet or body in a location that could expose them to injury should an unforeseen situation occur.

Always use the appropriate tools listed in the tool list and wear approved safety equipment.

MODIFICATIONS TO VEHICLE

Do not modify the vehicle in any manner that will change the weight distribution of the vehicle.

CAUTION

Changes to the weight distribution or the center of gravity may make the vehicle unstable or prone to roll over which could result in injury or death to the operator or passenger(s).

GENERAL MAINTENANCE

When any maintenance procedure or inspection is performed, it is important that care be exercised to insure the safety of the technician/mechanic or bystanders and to prevent damage to the vehicle.

Always read the **entire** relevant manual section (chapter) before attempting any inspection or service.

BEFORE SERVICING THE VEHICLE

Before attempting to inspect or service a vehicle, be sure to read the following warnings:

WARNING

To prevent personal injury or death, observe the following:

Before working on the vehicle, remove all jewelry (rings, watch, necklaces, etc.).

Be sure that no loose clothing or hair can become caught in the moving parts of the powertrain.

Use care not to contact hot objects.

Before attempting to operate or adjust the powertrain, the rear of the vehicle must be raised and supported on jack stands.

Wear OSHA approved clothing and eye protection when working on anything that

could expose the body or eyes to potential injury. In particular, use care when working with or around batteries, compressed air or solvents.

Always turn the key switch to 'OFF' and remove the key before disconnecting a live circuit.

When connecting battery cables, pay particular attention to the polarity of the battery terminals. Never confuse the positive and negative cables.

Set the parking 'PARK' brake before performing any work on the vehicle.

If repairs are to be made that will require welding or cutting, the battery and fuel tank must be removed and the fuel system drained.

⚠ WARNING

To prevent explosion that could result in severe personal injury or death, keep all smoking materials, open flame or sparks away from gasoline and batteries.

Never operate the starter with the spark plugs removed unless the ignition system has been disabled and the engine/exhaust are cold. Fuel expelled from the cylinders could be ignited by the ignition system or the hot exhaust system.

Never work on an engine that is hot.

Never test the ignition system without either connecting the spark plug lead to a tester or spare grounded spark plug.

If the spark function is to be observed at the spark plug, be sure to install a spare spark plug into the open cylinder before operating the starter.

Never test the function of a fuel pump in the vicinity of a hot engine or other source of flame or combustion.

Never confuse the hoses to and from the fuel pump. Verify that the carburetor and pulse lines are correctly installed before starting the engine (see FUEL SYSTEM section).

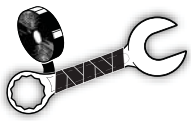

Wrap wrenches with vinyl tape to prevent the possibility of a dropped wrench from 'shorting out' a battery, which could result in an explosion and severe personal injury or death.

Aerosol containers of battery terminal protectant must be used with extreme care. Insulate metal container to prevent can from contacting battery terminals which could result in an explosion.

⚠ WARNING

To prevent illness or death, observe the following:

Never work around or operate a vehicle in an environment that does not ventilate exhaust gases from the area.

Exhaust gas (carbon monoxide) is deadly.

Carbon monoxide is an odorless gas that is formed as a natural part of the incomplete combustion of hydrocarbon fuels. Carbon monoxide is a dangerous gas that can cause unconsciousness and is potentially lethal.

The following are symptoms of carbon monoxide inhalation:

- *Dizziness*
- *Vomiting*
- *Intense headache*
- *Muscular twitching*
- *Weakness and sleepiness*
- *Throbbing in temples*

If experiencing any of these symptoms, get fresh air immediately.

Read all of Section B and this section before attempting any procedure. Pay particular attention to Notices, Cautions, Warnings and Dangers.

Battery Removal and Installation

Tool List	Qty.
Insulated Wrench, 1/2"	1
Socket, 1/2"	1
Extension, 12"	1
Ratchet	1
Battery Carrier	1

NOTICE

In the following text, there are references to removing/installing bolts etc. Additional hardware (nuts, washers, etc.) that is removed must always be installed in its original position unless otherwise specified. Non-specified torques are as shown in table contained in Section 'A'.

At the battery, remove hardware from the **negative** (-) cable before removing the **positive** (+) cable. Remove the bolt from the battery hold down and remove the battery (Ref. Fig. 1).

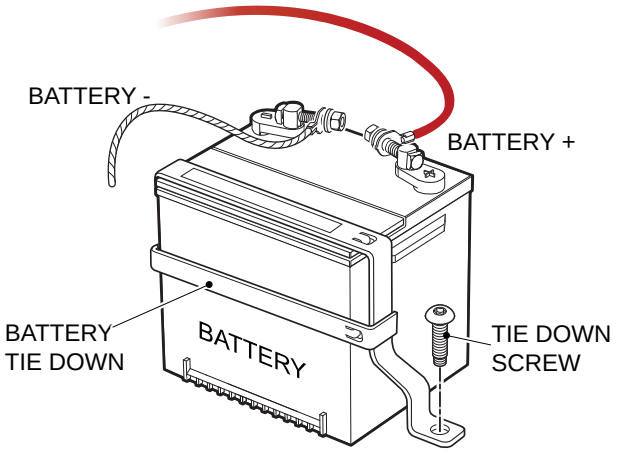

Fig. 1 Battery Removal

Connect the positive (+) battery cable first. **Connect negative (-) battery cable last.** Tighten the hold down bolt between 14 - 18 ft. lbs. (19 - 24 Nm).

Be sure to remove all corrosion from terminals and hardware. After installing battery, coat terminals with commercially available terminal protectant.

LIFTING THE VEHICLE

Tool List	Qty.
Floor Jack	1
Jack Stands	4
Chocks	4

Some servicing operations may require the front, rear or the entire vehicle to be raised.

WARNING

To prevent possible injury or death resulting from a vehicle falling from a jack, be sure the vehicle is on a firm and level surface. Never get under a vehicle while it is supported by a jack. Use jack stands and test the stability of the vehicle on the stands. Always place chocks in front and behind the wheels not being raised. Use extreme care since the vehicle is extremely unstable during the lifting process.

CAUTION

When lifting the vehicle, position jacks and jack stands only on the areas indicated.

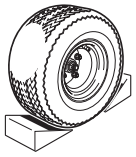

To raise the entire vehicle, install chocks in front and behind each front wheel (Ref. Fig. 2). Center the jack under the rear frame crossmember. Raise the vehicle and locate a jack stand under the outer ends of the rear axle.

Read all of Section B and this section before attempting any procedure. Pay particular attention to Notices, Cautions, Warnings and Dangers.

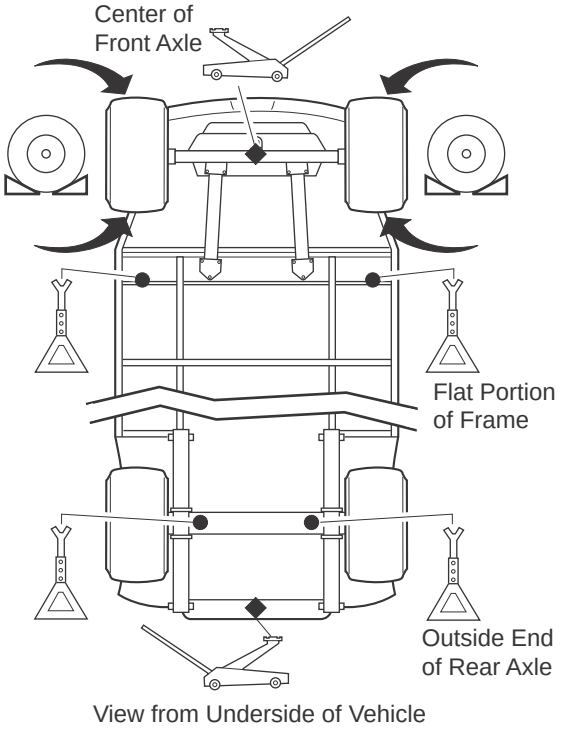

Fig. 2 Lifting the vehicle

Lower the jack and test the stability of the vehicle on the two jack stands.

Place the jack at the center of the front axle. Raise the vehicle and position jack stands under the frame cross-member as indicated.

Lower the jack and test the stability of the vehicle on all four jack stands.

If only the front or rear of the vehicle is to be raised, place the chocks in front and behind each wheel not being raised in order to stabilize the vehicle.

Lower the vehicle by reversing the lifting sequence.

Read all of Section B and this section before attempting any procedure. Pay particular attention to Notices, Cautions, Warnings and Dangers.

NOTES:

Read all of Section B and this section before attempting any procedure. Pay particular attention to Notices, Cautions, Warnings and Dangers.

NOTES:

TABLE OF CONTENTS FOR SECTION 'C'

SECTION TITLE **PAGE NO.**

BODY ..... **C - 1**
General ..... C - 1

BODY COMPONENT REPLACEMENT ..... **C - 1**
Instrument Panel Replacement ..... C - 5
Cowl Replacement ..... C - 5
Front Fascia Replacement ..... C - 5
Rocker Panel Replacement ..... C - 5
Front Seat Pod Replacement ..... C - 6
Rear Body Replacement ..... C - 6
Foot Rest Replacement ..... C - 7
Rear Bumper Replacement ..... C - 7
Front Seat Replacement ..... C - 8
Front Facing Rear Seat ..... C - 8
Rear Facing Rear Seat ..... C - 8
Cargo Bed Replacement ..... C - 8
Seat/Cargo Bed Latch ..... C - 9

SHUTTLE 2 REAR BODY ..... **C - 10**
Seat Support Removal ..... C - 10
Rear Fender Removal ..... C - 12
Rear Valence Panel Removal ..... C - 13
Side Panel Removal ..... C - 13
Load Deck Removal ..... C - 13
Bulkhead Removal ..... C - 14
Seat Back Removal ..... C - 14
Bed Frame Removal ..... C - 15
Seat Frame Removal ..... C - 15
Mid Support Removal ..... C - 16
Rear Bed Bracket Removal ..... C - 17

PAINTING ..... **C - 17**
Minor Scratches ..... C - 18
Large Scratches ..... C - 18
Complete Panel Repair ..... C - 18

LIST OF ILLUSTRATIONS

Fig. 1 Drill Out Metal Rivet ..... C - 1
Fig. 2 Body Components (Front) ..... C - 2
Fig. 3 Body Components (Seats and Rear) ..... C - 3
Fig. 4 Body Components (Cargo Box, Seat, Foot Rest) ..... C - 4
Fig. 5 Shuttle 2, Rear Body ..... C - 10
Fig. 6 Direction Selector Removal ..... C - 11
Fig. 7 Choke Cable Removal ..... C - 11
Fig. 8 Seat Support Removal ..... C - 11
Fig. 9 Rear Fender Removal ..... C - 12
Fig. 10 Rear Valence Panel Removal ..... C - 13
Fig. 11 Side Panel Removal ..... C - 13
Fig. 12 Load Deck Removal ..... C - 14
Fig. 13 Bulkhead Removal ..... C - 14
Fig. 14 Seat Back Removal ..... C - 14
Fig. 15 Bed Frame Removal ..... C - 15
Fig. 16 Seat Frame Removal ..... C - 15
Fig. 17 Mid Support Removal ..... C - 16
Fig. 18 Rear Bed Bracket Removal ..... C - 17

Read all of Section B and this section before attempting any procedure. Pay particular attention to Notices, Cautions, Warnings and Dangers.

NOTES:

Read all of Section B and this section before attempting any procedure. Pay particular attention to Notices, Cautions, Warnings and Dangers.

BODY

NOTICE

In the following text, there are references to removing/installing bolts etc. Additional hardware (nuts, washers etc.) that are removed must always be installed in their original positions unless otherwise specified. Non-specified torques are as shown in the table in Section A.

General

WARNING

To prevent possible injury or death from battery explosion. Batteries should always be removed before any servicing that will generate sparks. It is important to use a sharp drill bit when removing the rivets on the side of the vehicle. Extreme care must be used when drilling out the rivets located in the front of the body and the bottom side of the body. Excessive pressure could result in the drill bit being forced through the body panel and penetrating a component. As extra protection, it is recommended that a protective piece of sheet metal be placed between the battery and the rivet. Use of a drill depth stop will provide additional protection.

In general, body component replacement can be accomplished with a minimum of specialized tools. Most body components are held in place with conventional removable hardware (nuts, bolts, washers and screws). Some components are mounted with ‘pop’ rivets which require that the rivet head be removed in order to push out the shank of the rivet. The rivet head is easily removed by drilling into the head with a **sharp** drill bit that is **slightly** larger than the shank of the rivet (Ref. Fig. 1). Care must be exercised when drilling to prevent the drill from being forced through and damaging components where it could damage components located immediately behind the rivet. The best way to prevent this from occurring is to use a sharp drill bit that requires very little pressure to cut successfully and to place a piece of protective sheet metal between the surface being drilled and components directly behind it.

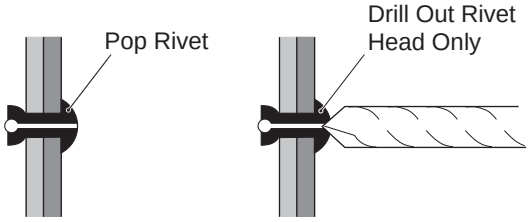

Fig. 1 Drill Out Metal Rivet

BODY COMPONENT REPLACEMENT

The body components can be replaced by removing the securing hardware, replacing the component and securing with hardware in the same orientation as removed. The illustrations on the following pages indicate the assembly methods for the various components.

Read all of Section B and this section before attempting any procedure. Pay particular attention to Notices, Cautions, Warnings and Dangers.

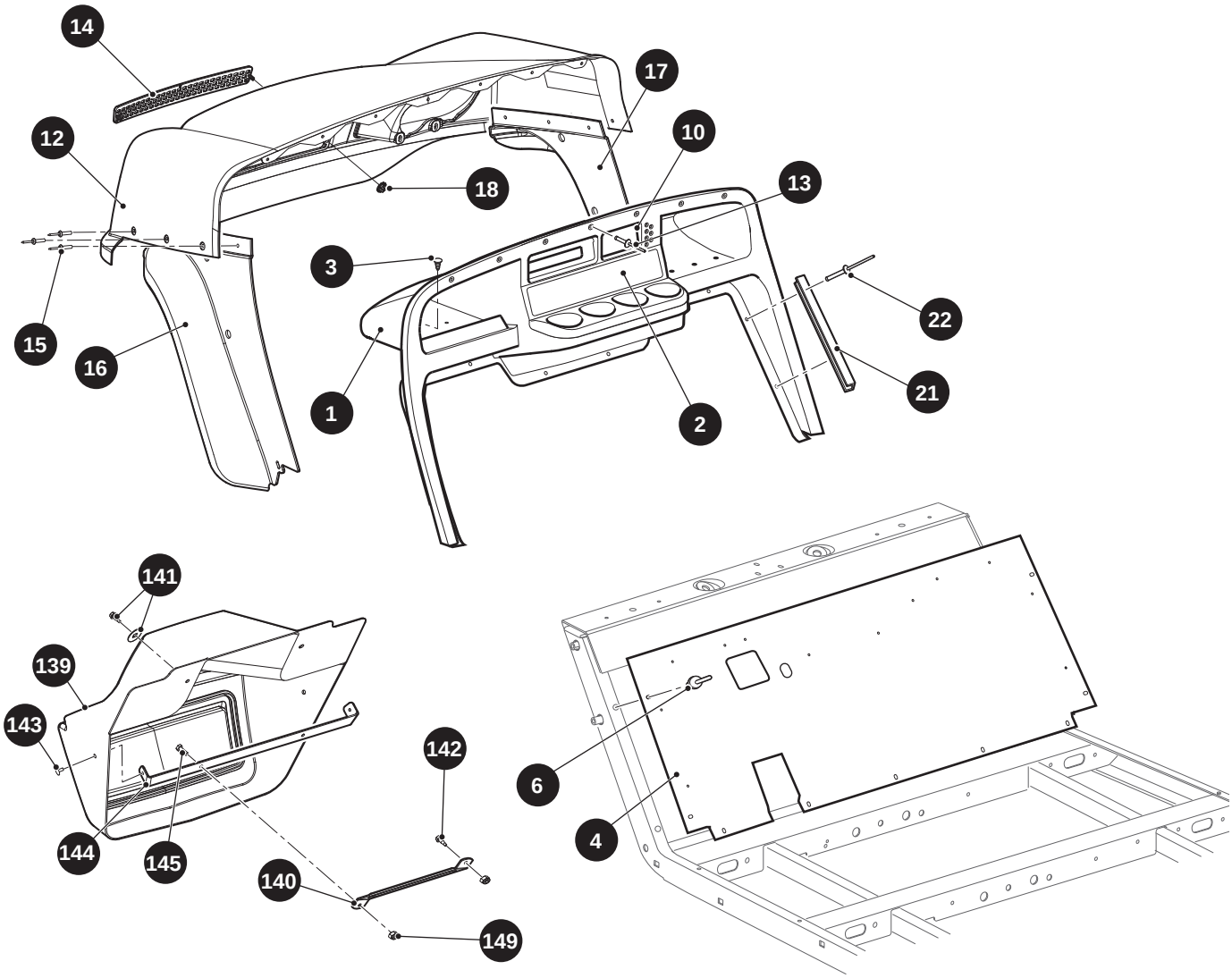

Fig. 2 Body Components Front

Read all of Section B and this section before attempting any procedure. Pay particular attention to Notices, Cautions, Warnings and Dangers.

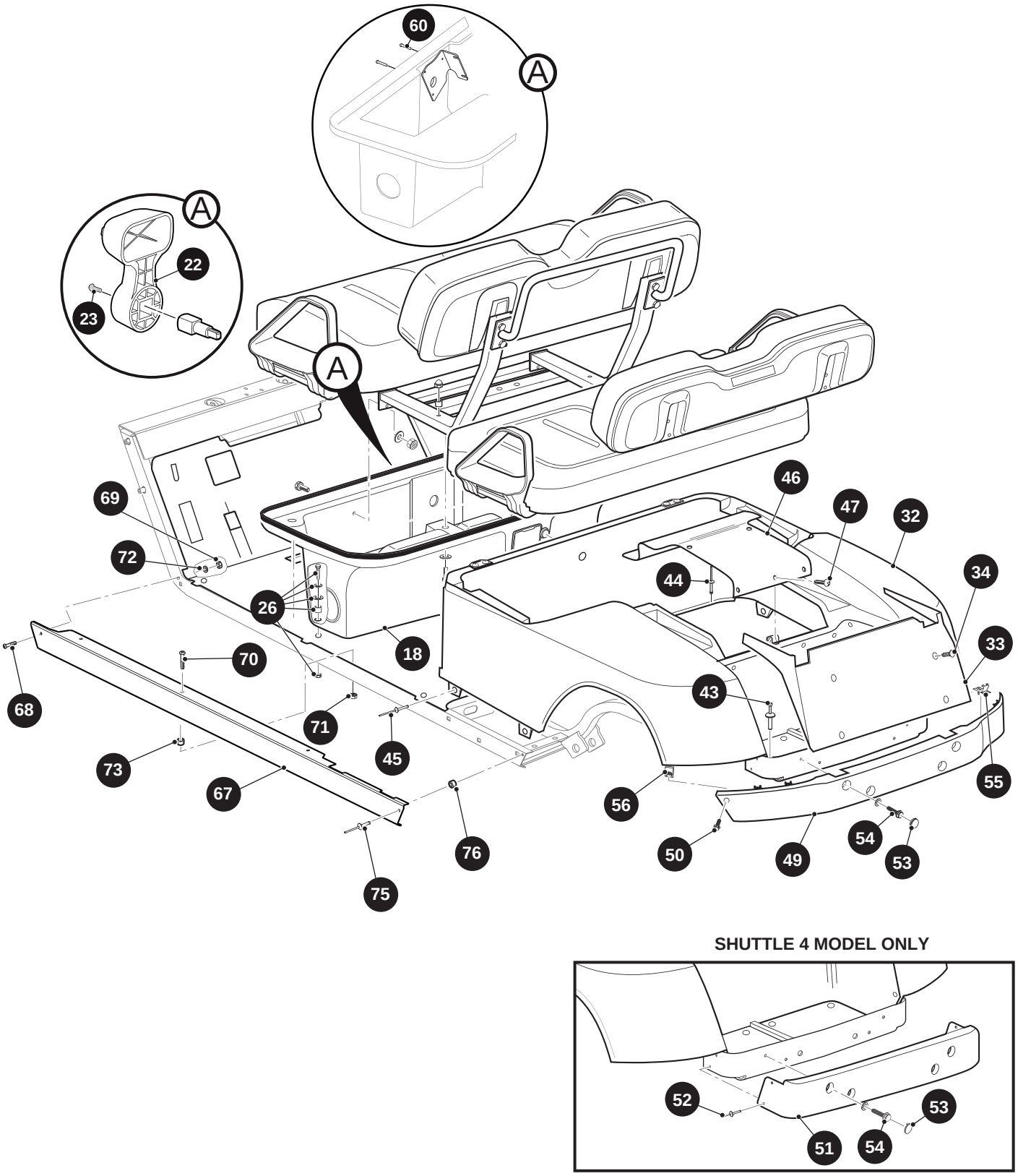

Fig. 3 Components (Seats and Rear)

Read all of Section B and this section before attempting any procedure. Pay particular attention to Notices, Cautions, Warnings and Dangers.

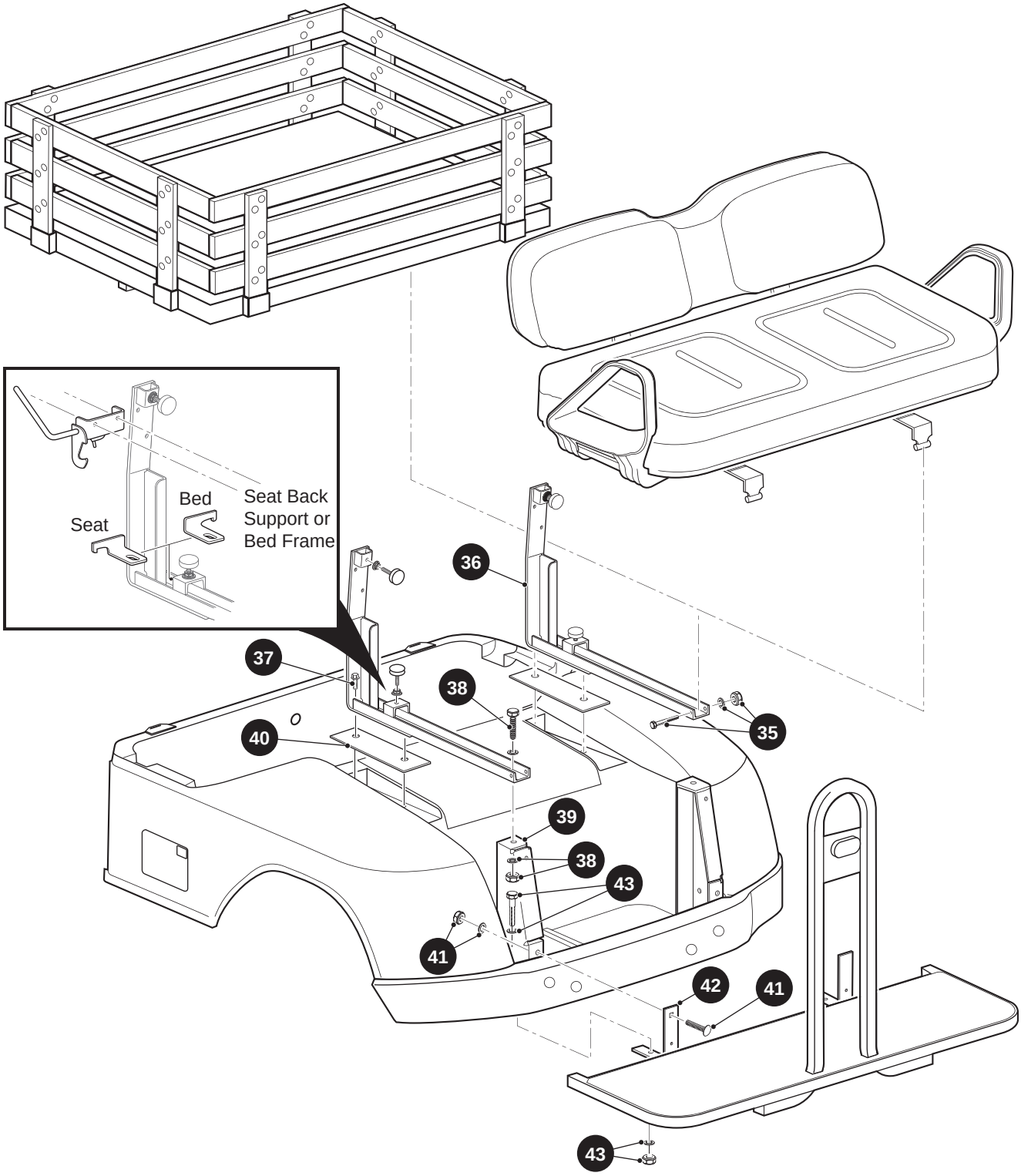

Fig. 4 Body Components (Cargo Box, Seat, Foot Rest)

Read all of Section B and this section before attempting any procedure. Pay particular attention to Notices, Cautions, Warnings and Dangers.

Instrument Panel Replacement

Tool List	Qty.
Electric/air Drill	1
Drill Bit, 7/32"	1
Wrench, 5/16"	1
Phillips Screwdriver	1
Rivet Gun	1

NOTICE

The instrument panel may be removed without removing the cowl or may be removed as part of the cowl.

WARNING

To prevent the possibility of injury due to lack of vehicle information, the correct safety label must be on the instrument panel at all times.

When installing a replacement instrument panel, a new safety label (2) **MUST** be ordered and placed on the new instrument panel. When ordering a replacement instrument panel, provide vehicle serial number to the Service Parts Representative who will provide the correct part number for the safety label.

Using an insulated wrench, disconnect the battery cable at the negative (-) battery terminal.

Pull the front of the floor mat (4) up to expose the rivets (13) that secure the instrument panel (1) to the floor. Drill out the rivets attaching the bottom of the instrument panel to the floor and across the top of the instrument panel attaching it to the cowl (7) (Ref. Fig. 2).

Remove the four ratchet fasteners (3) located within the instrument panel storage compartments**.**

The instrument panel may now be pulled away from the cowl.

Remove the drive rivets securing the key switch plate (10) to the instrument panel. Rotate the key switch plate and push it through the instrument panel opening, freeing the panel for removal.

Reassembly is the reverse order of disassembly and will require new drive rivets.

Cowl Replacement

Tool List	Qty.
Electric/air Drill	1
Drill Bit, 7/32"	1
Wrench, 5/16"	1
Phillips Screwdriver	1
Rivet Gun	1
Duct Tape	1
Allen Key, 3/16"	1

Drill out the rivets (13) across the top of instrument panel (1) attaching it to the cowl (12) (Ref. Fig. 2) and (Ref. Fig. 3).

Drill out the rivets (15) securing the sides of the cowl to the frame.

Reassembly is the reverse order of disassembly and will require new rivets.

Front Fascia Replacement

Tool List	Qty.
Wrench, 7/16"	1
Pry Bar	1

The front fascia (139) need not be removed to replace any other body components (Ref. Fig. 2).

If the front fascia is damaged, remove hardware (141) securing the front shield to the frame.

Remove the two rivets (143) securing the front shield to the brackets (144).

If a bracket is damaged, remove screw (145) securing it to the frame after removing the front shield.

Install replacement shield in reverse order of disassembly.

Rocker Panel Replacement

Tool List	Qty.
Phillips Screwdriver	1
Wrench, 7/16"	1
Electric/air Drill	1
Drill Bit, 7/32"	1
Rivet Gun	1

Remove the rocker panel (67) by removing the hardware (70) securing them to the frame (Ref. Fig. 3). As the rocker panel is removed, be sure to locate the three spacers (73) under each sill plate for reuse when sill plates are reinstalled.

To remove rocker panel end, remove rivet (75) and unsnap rocker panel end from the vehicle frame. To remove other the other end remove the hardware (68). (Ref. Fig. 2) and (Ref. Fig. 3).

Replace the rocker panel end in reverse order of disassembly.

Read all of Section B and this section before attempting any procedure. Pay particular attention to Notices, Cautions, Warnings and Dangers.

Front Seat Pod Replacement

Tool List	Qty.
Wrench, 7/16"	2
Wrench, 1/2"	2
Wrench, 9/16"	2
Phillips Screwdriver	1
Drill	1
Drill Bit, 3/16"	1
Drill Bit, 5/16"	1
Rivet Gun	1
Ratchet	1
Socket, 7/16"	2
Socket, 1/2"	2
Socket, 9/16"	2
Torque Wrench	1

NOTICE

Refer to TORQUE SPECIFICATIONS in Section A for standard torque values unless otherwise noted in manual text.

WARNING

To reduce the danger of battery explosion, disconnect the negative (-) battery cable before proceeding.

To gain access to the inside of the seat pod (18), lift the front seat bottom vertically from its positioning pins (Ref. Fig. 3). Remove the hardware attaching the seat back supports and remove the supports from pod.

Remove the screw (23) and handle (22) from the direction selector shaft and remove the rivets (60) from the seat pod which is secured to the direction selector mounting bracket.

Remove the two bolts securing the direction selector to the bracket and remove the direction selector. See DIRECTION SELECTOR for more information.

Disconnect the four-pin connector from the Speed control at connection near the floor.

Remove the hardware (26) securing the seat pod to the floor and remove the pod.

Installation of new seat pod is the reverse order of disassembly using new rivets.

Rear Body Replacement

Tool List	Qty.
Electric/air Drill	1
Drill Bit, 7/32"	1
Socket, 3/8"	1
Socket, 1/2"	1
Socket, 9/16", Deepwell	1
Ratchet, 3/8" Drive	1
Wrench, 3/8"	1
Wrench, 1/2"	1
Wrench, 9/16"	1
Rivet Gun	1
Phillips Screwdriver	1
Pry Bar	1
Torque Wrench	1

NOTICE

Refer to TORQUE SPECIFICATIONS in Section A for standard torque values unless otherwise noted in manual text.

WARNING

To prevent possible injury or death from battery explosion. The battery should always be removed before any servicing that will generate sparks. It is important to use a sharp drill bit when removing the rivets on the side of the vehicle. Extreme care must be used when drilling out the rivets located in the front of the body and the bottom side of the body. Excessive pressure could result in the drill bit being forced through the body panel and penetrating the battery. As extra protection, it is recommended that a protective piece of sheet metal be placed between the battery and the rivet. Use of a drill depth stop will provide additional protection.

Read all of Section B and this section before attempting any procedure. Pay particular attention to Notices, Cautions, Warnings and Dangers.

NOTICE

Prior to removing the rear body, the foot rest or cargo bed, as applicable, must be removed. See the applicable paragraphs for instructions for replacement of those items.

NOTICE

To avoid damage to the plastic body component, remove or install seat support brackets by sliding to the open end of the molded channel. Do not force the seat support brackets into or out of the channels from above.

Remove the rear rocker panel as described above.

Remove the rear seat from the rear body (32) (Ref. Fig. 3).

Remove the hardware (35) attaching rear option (cargo bed or rear facing seat) to the seat back supports (36).

Remove the screws (37) that secure seat back support to the vehicle frame. Remove the hardware (38) that secures the seat back support to the frame support (39). Remove each seat back support and spacer (40) from rear body. Repeat procedure on other seat back support.

At the front of the rear body, remove the rivets (44) securing the rear body to the frame and floorboard area. Drill out the heads of the large head rivets (45) that secure the bottom of the body panel to the side of the vehicle (Ref. Fig. 3) and (Ref. Fig. 4).

Remove the rivets (43) that secure the floor of the bagwell area to the frame underneath.

Remove the rear body.

If the trunk lid (46) is to be reused, remove the hardware (47) securing the trunk lid to the body panel. Remove the trunk lid.

Installation of rear body is in the reverse order of disassembly using new rivets. Install the bolts (38) into the seat supports (39) and tighten to 21 - 25 ft. lbs. (29 - 34 Nm) torque.

Foot Rest Replacement

Tool List	Qty.
Electric/air Drill	1
Drill Bit, 7/32"	1
Socket, 9/16"	1
Ratchet	1
Wrench, 9/16"	1

WARNING

The foot rest is heavy and awkward to handle. To prevent possible personal injury, it is strongly recommended that adequate help or a lifting device be used to remove the foot rest from the vehicle.

NOTICE

To avoid damage to the plastic body component, remove or install seat support brackets by sliding to the open end of the molded channel. Do not force the seat support brackets into or out of the channels from above.

Remove rear valance panel (33) by prying out plastic fasteners (34) (Ref. Fig. 3) and (Ref. Fig. 4).

Remove the hardware (35) attaching rear option (cargo bed or rear facing seat) to the seat back supports (36).

Remove the screws (37) that secure the seat back support to the vehicle frame. Remove the hardware (38) that secures the seat back support to the frame support (39). Remove each seat back support and spacer (40) from rear body. Repeat procedure on other seat back support.

Remove the nut (41) securing the vertical foot rest bracket (42) to each frame support (39) (Ref. Fig. 4). (Leave the bolt in place.)

Remove the nut (43) securing the horizontal foot rest bracket to each frame support. (Leave the bolt in place.)

While supporting the end of the foot rest, remove the bolt attaching the vertical bracket to the frame support.

Replacement of the foot rest is the reverse order of removal. Tighten bolts to 21 - 25 ft. lbs. torque.

Rear Bumper Replacement

Tool List	Qty.
Electric/air Drill	1
Drill Bit, 7/32"	1
Flat Tip Screwdriver	1
Allen Wrench, 7/32"	1

To remove the long bumper (49), remove the bolts (50) at each end of the rear bumper (Ref. Fig. 3).

To remove the short bumper (51), drill out rivets (52) located at each end of the rear bumper (Ref. Fig. 3).

Carefully remove the plugs (53) with a screwdriver. Remove the shoulder bolts (54) underneath the plugs.

Read all of Section B and this section before attempting any procedure. Pay particular attention to Notices, Cautions, Warnings and Dangers.

Remove the rear bumper.

To replace the long bumper, engage the top of the bumper with the underside of the fenders. Push bumper upward as fender slides between the bumper clips (55) and the bumper. Insert bolts through holes in the bumper into the frame and tighten to 9 - 12 ft. lbs. (12 - 16 Nm) torque. Replace bumper plugs. Secure each end of the bumper to the fender with bolt and J-nut (56).

To replace the short bumper, place the rear bumper against the rear chassis and install new rivets on each end of bumper. Insert bolts through holes in the bumper into the frame and tighten to 9 - 12 ft. lbs. (12 - 16 Nm) torque. Replace bumper plugs.

Front Seat Replacement

Tool List	Qty.
Wrench, 7/16"	2
Rachet	1
Socket, 7/16"	2
Torque Wrench	1

NOTICE

Refer to TORQUE SPECIFICATIONS in Section A for standard torque values unless otherwise noted in manual text.

The front seat bottom is not held in place by hardware (Ref. Fig. 3), Rather, it is nestled into the top of the front seat pod. To remove the seat, simply lift the seat off the pod.

To remove the front seat back, remove bolt securing seat back and rear hand hold bar to the back support

Install replacement in the reverse order of disassembly.

Front Facing Rear Seat

Tool List	Qty.
Wrench, 7/16"	2
Ratchet	1
Socket, 7/16"	2
Torque Wrench	1

NOTICE

Refer to TORQUE SPECIFICATIONS in Section A for standard torque values unless otherwise noted in manual text.

The seat bottom is held in place by hinges on the front edge of the seat bottom and on front top edge of the rear body (Ref. Fig. 3). To remove the seat bottom, raise the seat from the back and lift seat out of hinge.

The front facing rear seat back is attached to the back support (Ref. Fig. 4). To remove the seat back, remove the hardware attaching the seat back to the seat back support.

To replace the front facing rear seat, install in the reverse order of removal.

Rear Facing Rear Seat

Tool List	Qty.
Wrench, 1/2"	2

The rear facing rear seat is attached to the vehicle at the seat pivot (Ref. Fig. 4).

Remove the hardware from the seat pivot.

Replacement is in the reverse order of removal.

Cargo Bed Replacement

Tool List	Qty.
Wrench, 1/2"	2
Ratchet	1
Torque Wrench, ft. lbs	1
Socket, 1/2"	2

WARNING

The cargo bed is heavy and awkward to handle. To prevent possible personal injury, it is strongly recommended that adequate help or a lifting device be used to remove the cargo bed from the vehicle

Read all of Section B and this section before attempting any procedure. Pay particular attention to Notices, Cautions, Warnings and Dangers.

Remove the hardware (35) from the cargo bed pivot (Ref. Fig. 4).

Unlatch the bed catch at the front of the cargo bed, tilt the bed sufficiently for the catch to clear the hold down bracket and lift the bed from the vehicle.

Replacement of the cargo bed is the reverse order of removal. Tighten bolts to 11 - 15 ft. lbs. (15 - 20 Nm) torque.

Seat/Cargo Bed Latch

Tool List	Qty.
Phillips Screwdriver	1
Wrench, 5/16"	2
Wrench, 3/8"	1
Wrench, 1/2"	1

NOTICE

The following text is sequenced to remove the rear body structure of the Shuttle 2. Each successive step requires that the previous be accomplished.

During reassembly, do not tighten components to specified torque until adjustment with mating components has been achieved.

Refer to TORQUE SPECIFICATIONS in Section A for non specified appropriate values.

The rear facing rear seat and the cargo bed is equipped with a safety latch to prevent the sear or bed from pivoting during vehicle operation (Ref. Fig. 4).

The latch tab for the seat is to be mounted so that the arm is toward the outside of the vehicle.

The latch tab for the bed is to be mounted so that the arm is toward the inside of the vehicle.

To be properly adjusted, the rear edge of the latch tab, when mounted under the driver side seat back adjustable bumper bracket, will align with the rear edge of the bracket. Check latch tab adjustment to ensure latch assembly fully engages tab when in locked position. Adjust as necessary by moving tab to the front or back to allow full engagement of latch assembly on tab.

Read all of Section B and this section before attempting any procedure. Pay particular attention to Notices, Cautions, Warnings and Dangers.

Shuttle 2 Rear Body

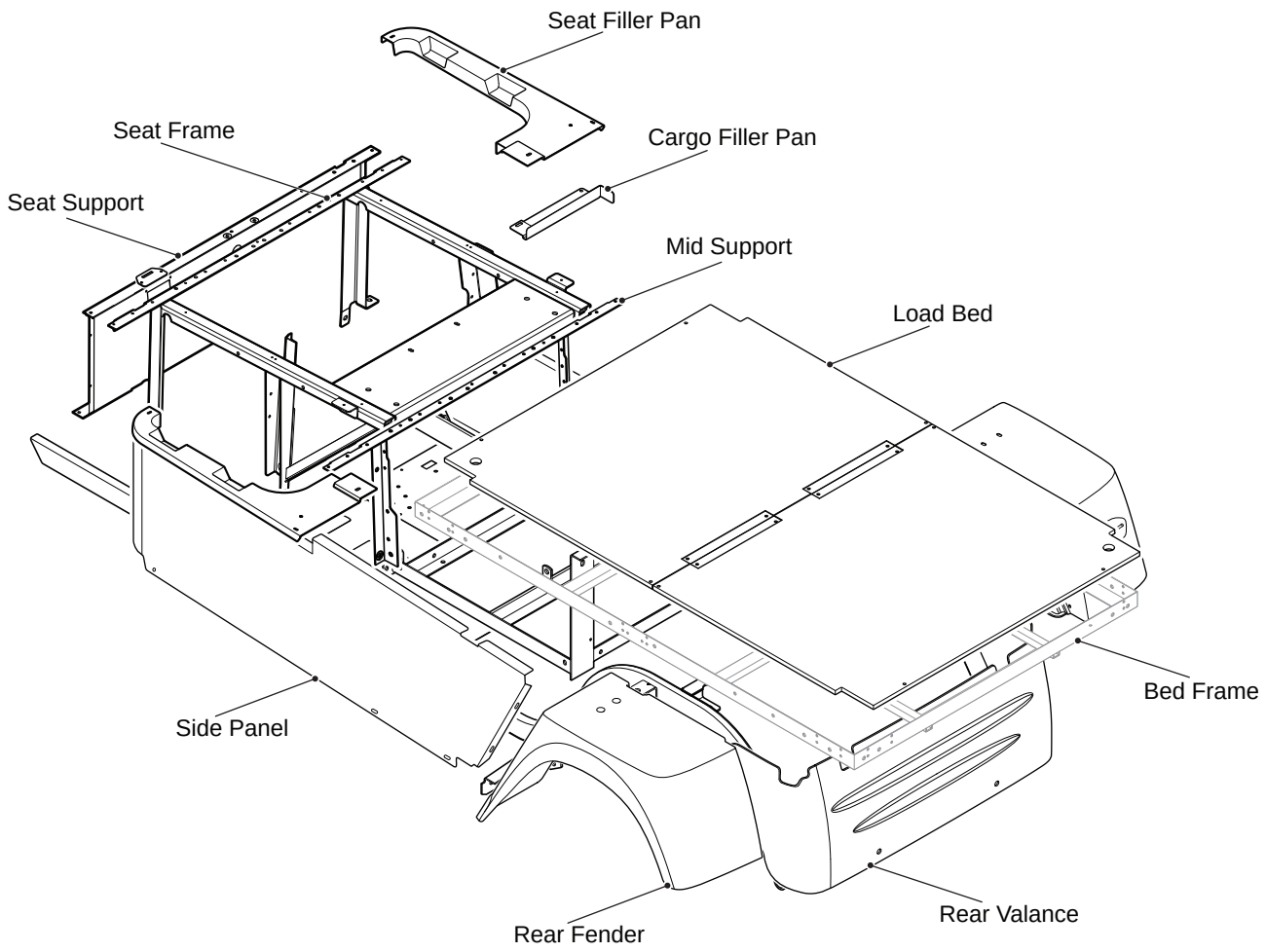

Fig. 5 Shuttle 2 Rear Body

Seat Support Removal

Tool List	Qty.
3/8" Drill	1
3/16" Drill Bit	1
Rivet Gun	1
Torque Wrench, ft lbs	1
Phillips Bit	1
Phillips Screwdriver	1
Open End Wrench, 7/16"	1
Open End Wrench, 7/8"	1

Tool List	Qty
Ratchet	1
Socket, 7/16"	1
Socket, 7/8"	1
Torque Wrench	1

NOTICE

Refer to TORQUE SPECIFICATIONS in Section A for standard torque values unless otherwise noted in manual text.

Read all of Section B and this section before attempting any procedure. Pay particular attention to Notices, Cautions, Warnings and Dangers.

⚠ WARNING

To prevent inadvertent movement that could result in severe injury or death, remove the negative (-) battery cable before proceeding.

Remove screw (1) securing the handle (2) to the direction selector shaft, and remove handle (Ref. Fig. 6). Loosen the hardware (3) attaching the direction selector bracket. securing the direction selector (5) to the seat support frame and remove the direction selector and cables as an assembly (Ref. Fig. 6).

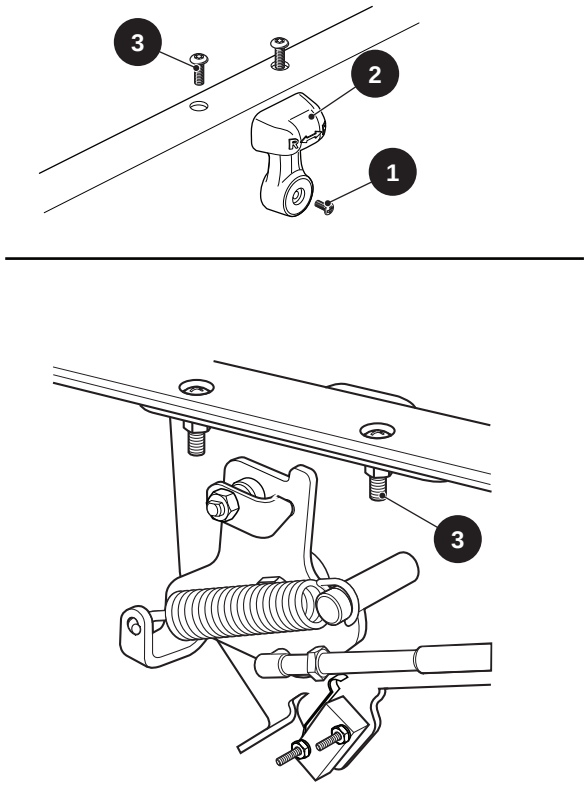

Fig. 6 Direction Selector Removal

Loosen the nut (1)(on the rear of the choke cable (2) and pull the choke cable through the seat support panel (3) (Ref. Fig 7).

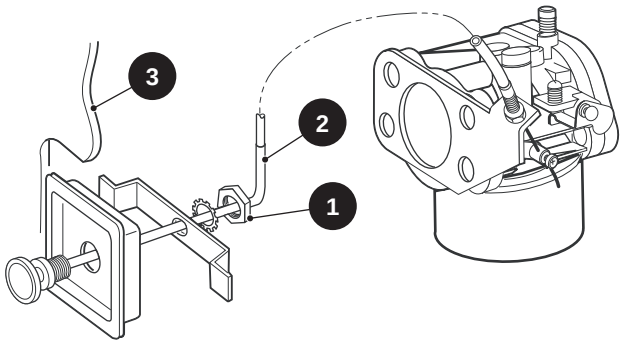

Fig. 7 Choke Cable Removal

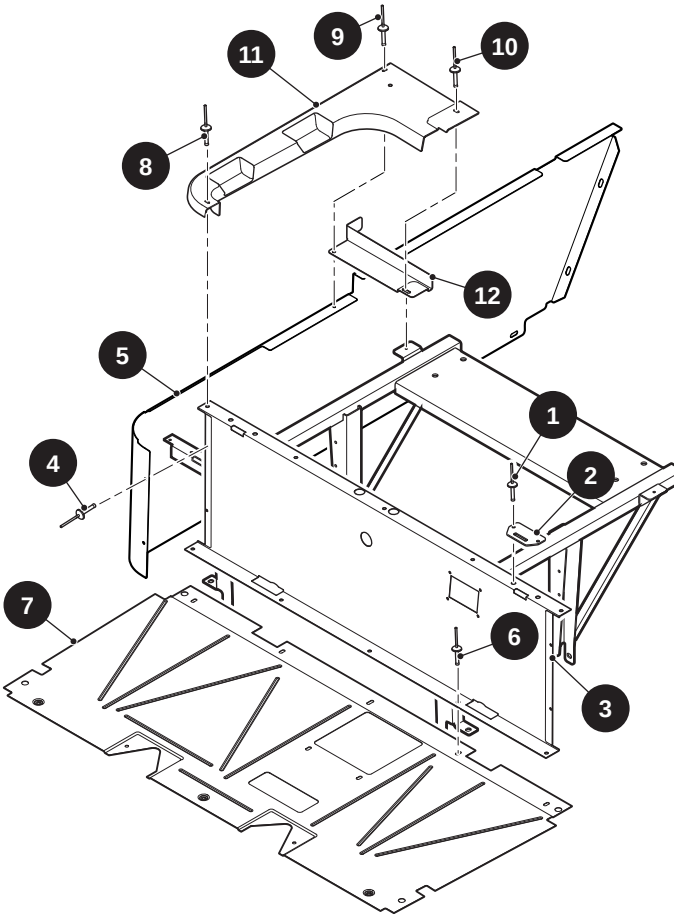

Fig. 8 Seat Support Removal

1. Drill out the four rivets (1) securing the seat hinge (2) to the seat support frame (Ref. Fig. 8).
2. Drill out the four rivets (4) that secure the seat support to the side panels.

Read all of Section B and this section before attempting any procedure. Pay particular attention to Notices, Cautions, Warnings and Dangers.

3. Pull back the floormat enough to access the bottom of the seat support panel. Drill out the five rivets (6) that secure the seat support (3) to the floor panel.
4. Drill out the six rivets (8, 9 & 10) that secure the seat filler panels (11) to the side panels (5) and remove. Remove the cargo filler panels (12).

Reassembly is the reverse of disassembly and requires the use of new rivets.

Rear Fender Removal

Tool List	Qty.
Ratchet	1
Socket, 7/16"	1
Lug Wrench	1
Wrench, 7/16"	1
3/8" Drill	1
3/16" Drill Bit	1
Rivet Gun	1
Small Pry Bar	1
Phillips Screwdriver	1
Pliers	1
Floor Jack, 1 1/2 ton	1
Jack Stands	2
Wheel Chocks	4

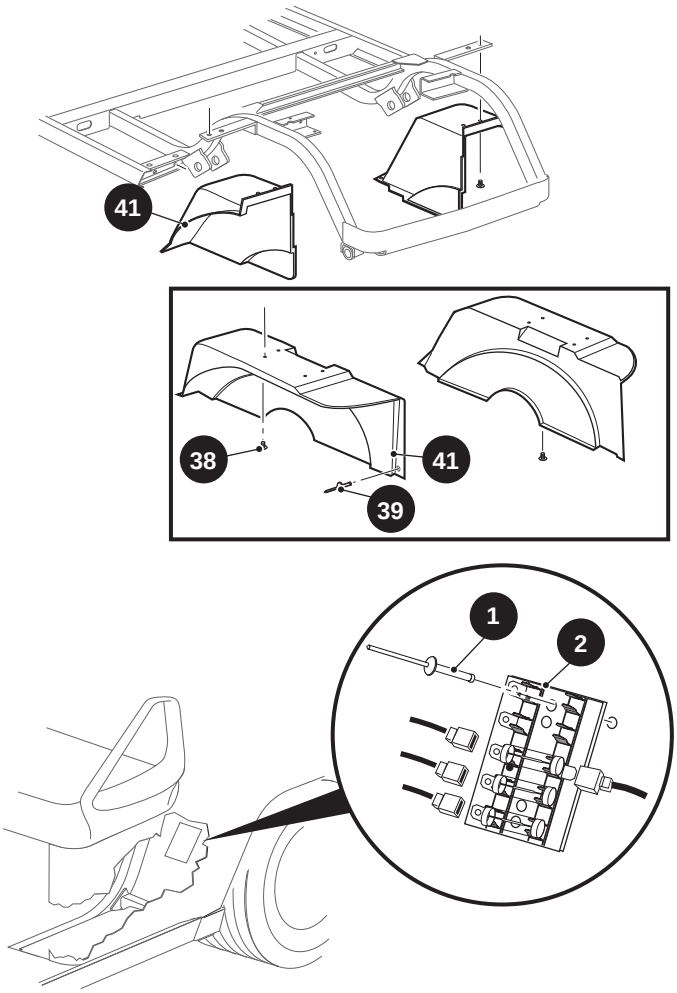

Fig. 9 Rear Fender Removal

Drill out the two rivets (1) securing the fuse block (2) to the fender (3) (Ref. Fig. 9).

Loosen the rear wheel lug nuts approximately 1/4 turn and lift the rear of the vehicle and support on jack stand per SAFETY section. Remove the wheel and tire. Firmly grasp the rear of the rivet (39) and drill out the two rivets securing the fender (41).

Gently pry out the ratchet (Christmas tree) fasteners (38) and remove fender (41).

Reassembly is the reverse of disassembly. New Ratchet fasteners (38) may be required. New rivets are required to attach the fuse block to the fender.

Read all of Section B and this section before attempting any procedure. Pay particular attention to Notices, Cautions, Warnings and Dangers.

Rear Valence Panel Removal

Tool List	Qty.
Small Pry Bar	1

Gently pry out the two ratchet (Christmas tree) fasteners (1) and remove the rear valence panel (2) from the frame .(Ref, Fig. 10).

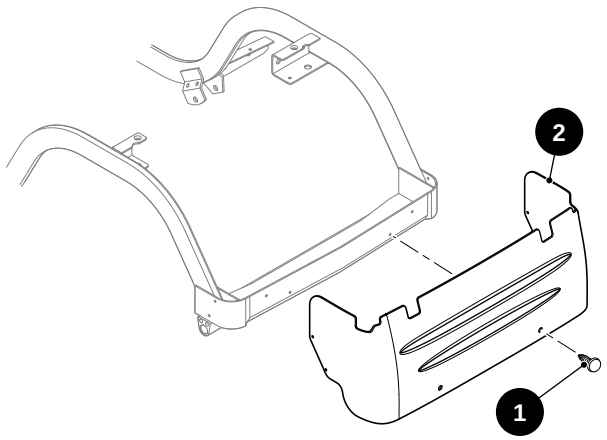

Fig. 10 Rear Valence Panel Removal

Reassembly is the reverse of disassembly and requires the use of new ratchet fasteners.

Side Panel Removal

Tool List	Qty.
3/8" Drill	1
3/16" Drill Bit	1
Rivet Gun	1

Drill out the two horizontal rivets (1) at the rear of the side panel (2) remove the rivets and note the location of the spacer (3) (Ref. Fig. 11).

Remove the two bolts, washers and lock nuts (4, 5 & 6) securing the side panel (2) to the bed frame.

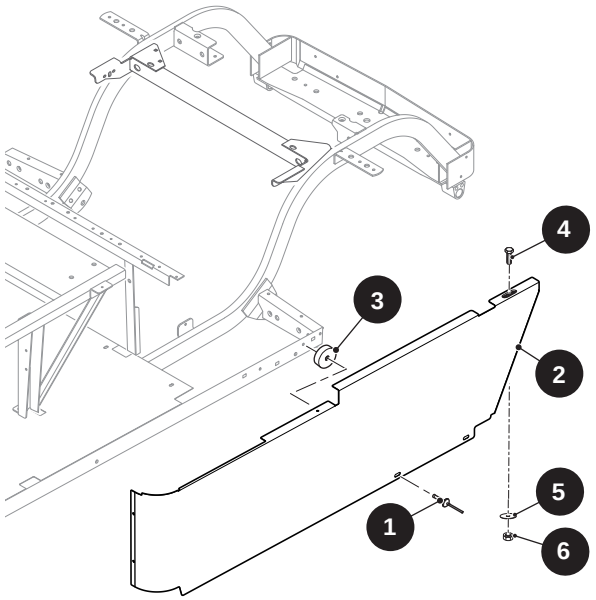

Fig. 11 Side Panel Removal

Reassembly is the reverse of disassembly and requires the use of new rivets.

Load Deck Removal

Tool List	Qty.
Torque Wrench, ft. lbs	1
Phillips Screwdriver Bit	1
Ratchet	1
Socket, 7/16"	1
Wrench, 7/16"	1

NOTICE

For ease of handling, separating the two sections of the load bed is recommended.

Remove the four screws (1) from the movable (2) side of the load bed hinges (3). Remove the movable deck (Ref. Fig. 12).

Remove the four screws, washers and lock nuts (4, 5 & 6) securing the load bed (2) to the bed frame (7). Remove the load bed.

Reassembly is the reverse of disassembly. Nuts (6) securing the load bed (2) to the bed frame (7) are to be tightened to 8.5 - 9.0 ft. lbs. (11.5 -12 Nm) torque. It is recommended that new lock nuts be used.

Read all of Section B and this section before attempting any procedure. Pay particular attention to Notices, Cautions, Warnings and Dangers.

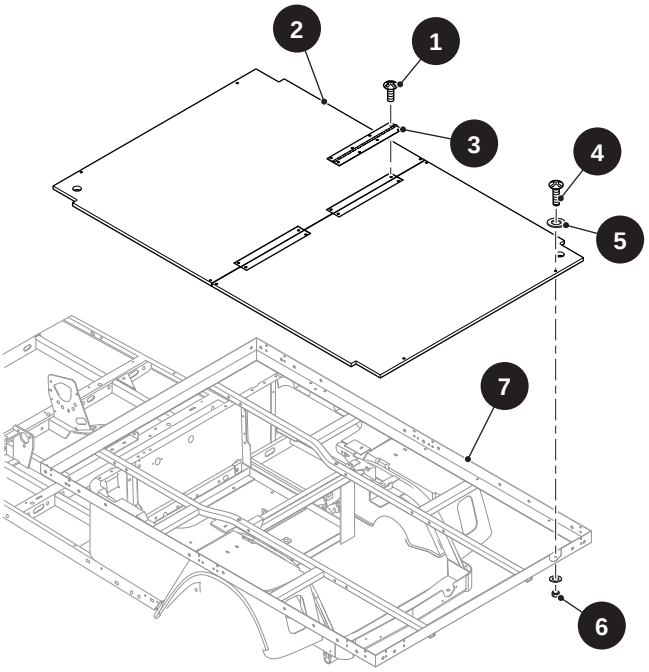

Fig. 12 Load Deck Removal

Bulkhead Removal

Tool List	Qty.
Torque Wrench, ft. lbs	1
Ratchet, 3/8" Drive	1
Socket, 7/16"	1
Wrench, 7/16’	1

Remove the four screws, washers and lock nuts (1, 2 & 3) securing the bulkhead (4) to the load bed frame (5) (Ref. Fig. 13).

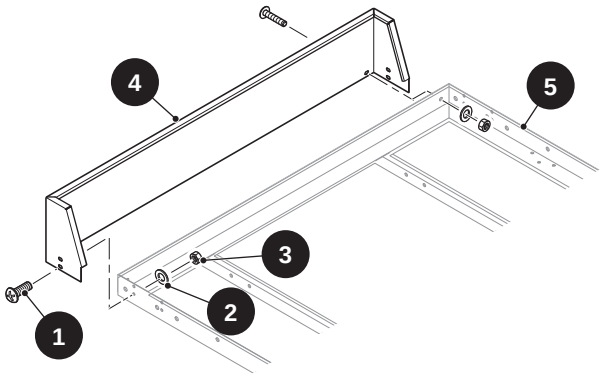

Fig. 13 Bulkhead Removal

Reassembly is the reverse of disassembly.

Nuts (3) securing the bulkhead (4) to the bed frame (5) are to be tightened to 8.5 - 9.0 ft. lbs. (11.5 - 12.2 Nm) torque. It is recommended that new lock nuts be used.

Seat Back Removal

Tool List	Qty.
Torque Wrench, ft. lbs	1
Ratchet	1
Socket, 1/2"	1
Wrench, 1/2"	1

NOTICE

It is not necessary to remove the seat back from the seat back support brackets

Remove the four bolts, washers and lock nuts (1, 2 & 3) and remove seat back assembly (4) from the Seat frame weldment (5) (Ref. Fig. 14).

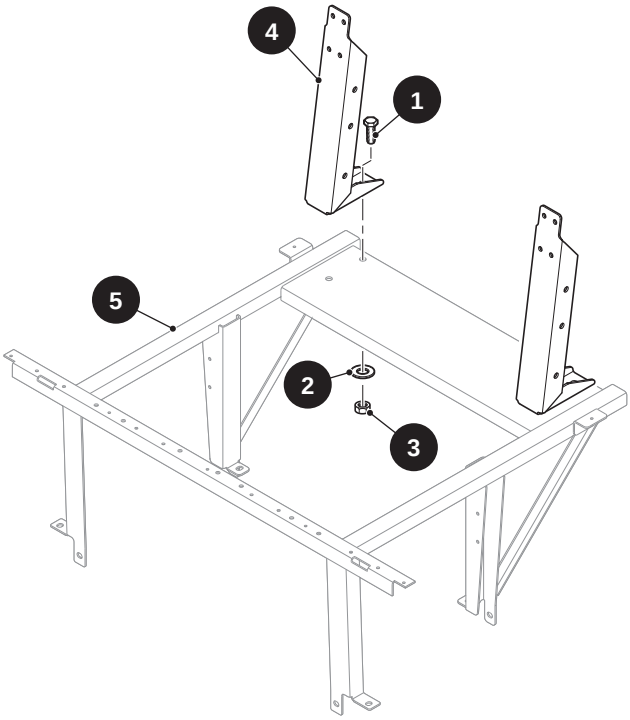

Fig. 14 Seat Back Removal

Reassembly is the reverse of disassembly. Nuts (3) are to be tightened to 21 - 25 ft. lbs. (28.5 - 34.0 Nm) torque. It is recommended that new lock nuts be used.

Read all of Section B and this section before attempting any procedure. Pay particular attention to Notices, Cautions, Warnings and Dangers.

Bed Frame Removal

Tool List	Qty.
Torque Wrench, ft. lbs	1
Phillips Screwdriver Bit	1
Ratchet	1
Socket, 7/16"	1
Socket, 1/2"	1
Socket, 9/16"	1
Wrench, 7/16"	1
Wrench, 1/2"	1

NOTICE

It is not necessary to remove the bulkhead in order to remove the load bed frame.

If desired, the front bed mount brackets may be removed from the seat frame, but it is not required as part of the Bed Frame Removal.

If this is an electric vehicle, the rear flanges of the battery rack (8) are held between the vehicle frame and the bed frame (4).

Starting from the front of the vehicle remove the two horizontal bolts, washers and lock nuts (1, 2 & 3) that secure the bed frame (4) to front bed mount brackets (5). (Ref. Fig. 15)

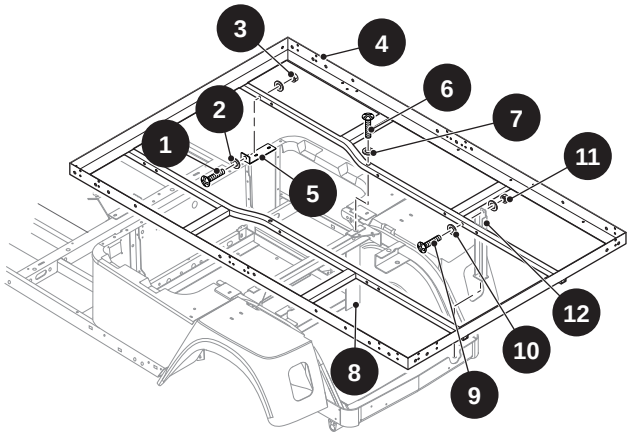

Fig. 15 Bed Frame Removal

Remove the two vertical Torx head bolts and washers (6 & 7) that are installed into the tapped holes in the upper rear cross member of the vehicle frame.

Remove the two horizontal bolts, washers and nuts (9, 10 & 11) securing the rear of the bed frame to the vertical rear bed brackets (12).

The bed frame (4) may now be lifted vertically and removed.

Reassembly is the reverse of disassembly.

5/16-18 Nuts (3) are to be tightened to 14 - 18 ft. lbs. (19.0 - 24 Nm) torque.

3/8-16 Torx head bolts (6) are to be tightened to 20 - 25 ft. lbs. (27.0 - 34 Nm) torque.

1/4-20 Nuts (3) are to be tightened to 8.5 - 9 ft. lbs. (11.5 - 12.0 Nm) torque (Ref. Fig. 14).(Ref. Fig. 15)

It is recommended that new lock nuts be used.

Seat Frame Removal

Tool List	Qty.
Torque Wrench, ft. lbs	1
Ratchet	1
Socket, 1/2"	1
Wrench, 1/2"	1
Torx Bit, T-45	1
Thread Sealant (red)	AR

Remove the four horizontal washer head bolts (1) attaching the vertical legs of the seat frame (2) to the tapped holes in the cross members below the floorboard (Ref. Fig. 16).

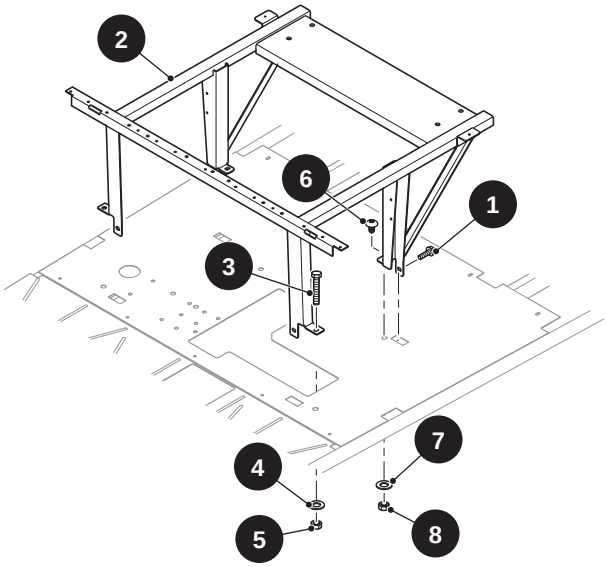

Fig. 16 Seat Frame Removal

Remove the two vertical bolts, washers and lock nuts (3, 4 & 5) from the front legs of the seat frame.

Remove the two Torx head bolts, washers and lock nuts (6, 7 & 8) from the rear legs of the seat frame.

Read all of Section B and this section before attempting any procedure. Pay particular attention to Notices, Cautions, Warnings and Dangers.

The front seat frame (2) may now be lifted vertically and removed.

Reassembly is the reverse of disassembly.

Nuts (5) are to be tightened to 12 - 15 ft. lbs. (16.3 - 20.3 Nm) torque.

It is recommended that new lock nuts be used.

Apply thread locking sealant to the washer head bolts (1) and tighten to 14 - 18 ft. lbs (19.0 - 24.0 Nm) torque.

Torx head bolts (6) are to be tightened to 21 - 25 ft. lbs. (28.0 - 34.0 Nm) torque.

Mid Support Removal

Tool List	Qty.
Torque Wrench, ft. lbs	1
Ratchet	1
Socket, 3/8"	1
Socket, 7/16"	1
Socket, 1/2"	1
Wrench, 3/8"	1
Wrench, 7/16"	1
Wrench, 1/2"	1
Thread Sealant (red)	AR

Remove bolt and nut attached to front end of fuel tank. Remove the horn (1) and the fuel pump (2) gas vehicle only) from the mid support (3) (Ref. Fig. 17).

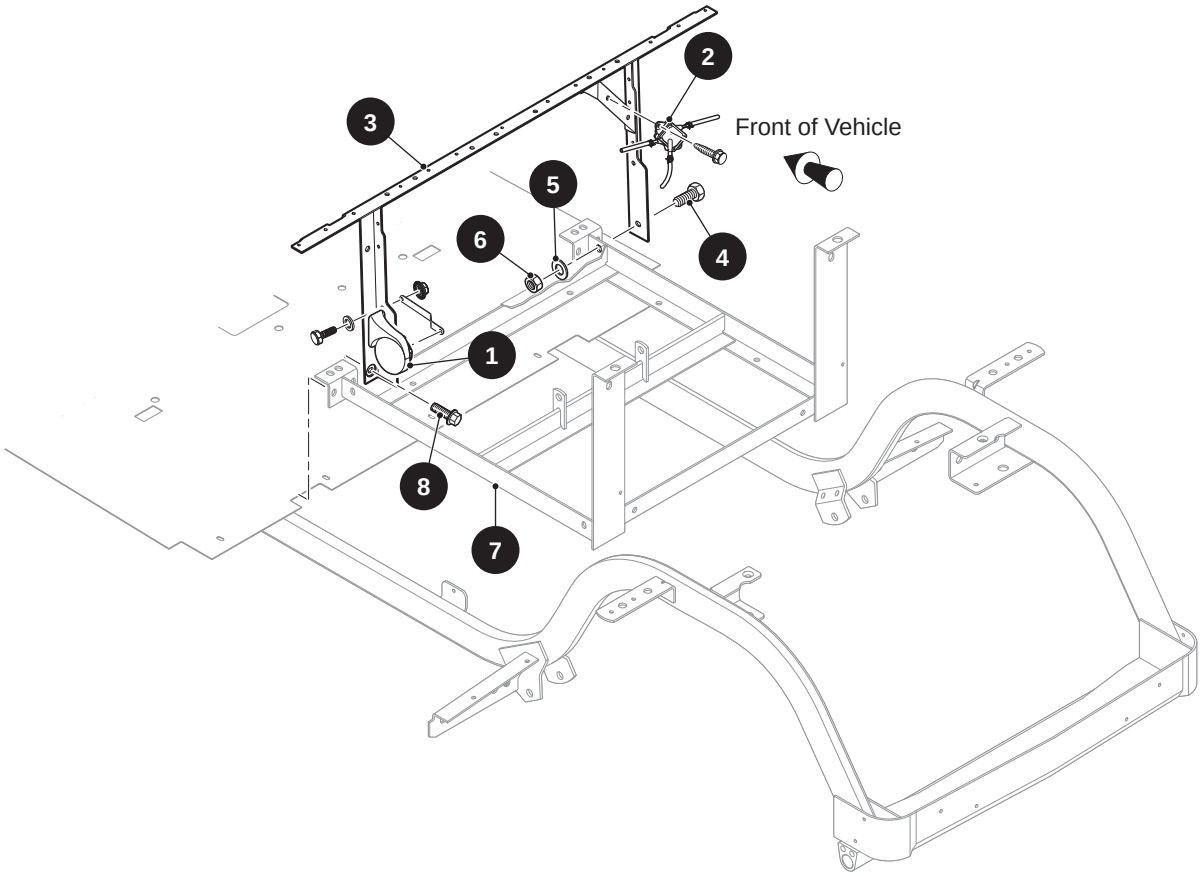

Fig. 17 Mid Support Removal

Remove the two horizontal bolts, washers and lock nuts (4, 5 & 6) securing the battery rack (7) to the mid support (3) (electric vehicle only). Remove the two washer head bolts (8) securing the mid support (3) to the vehicle frame cross member and lift out the mid support.

Read all of Section B and this section before attempting any procedure. Pay particular attention to Notices, Cautions, Warnings and Dangers.

Reassembly is the reverse of disassembly. Refer to TORQUE SPECIFICATIONS in Section 'A' for appropriate values.

When tightening the fuel pump mounting bolts (gas vehicles only), tighten just enough to secure the plastic fuel pump housing. Do not over tighten.

Nuts (6) are to be tightened to 12 - 15 ft. lbs. (16.0 - 20.0 Nm) torque.

Apply thread locking sealant to the washer head bolts (8) and tighten to 14 - 18 ft. lbs (16.0 - 20.0 Nm) torque.

It is recommended that new lock nuts be used.

Rear Bed Bracket Removal

Tool List	Qty.
Torque Wrench, ft. lbs	1
Ratchet	1
Socket, 1/2"	1
Wrench, 1/2	1

Remove the two vertical bolts, four washers and two lock nuts (1, 2 & 3) securing the two rear bed brackets (4) and remove from rear of vehicle (Ref Fig. 19 on page C-16).

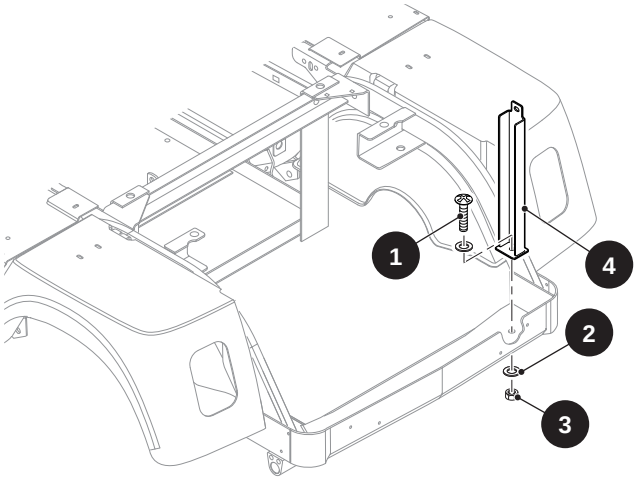

Fig. 18 Rear Bed Bracket Removal

Reassembly is the reverse of disassembly. Nuts (3) are to be tightened 14 - 18 ft. lbs. (19.0 - 24.0 Nm) torque.

It is recommended that new lock nuts be used.

PAINTING

Follow the paint manufacturer's recommendations for specific painting procedures and information.

WARNING

All painting must be done in an area with adequate ventilation to safely disperse harmful vapors.

Wear eye protection and respirator, following manufacturer's instructions, to protect from overspray and airborne mist.

Read all of Section B and this section before attempting any procedure. Pay particular attention to Notices, Cautions, Warnings and Dangers.

CAUTION

Provide protection from overspray to vehicle and surrounding area.

Minor Scratches

For minor scratches, the manufacturer suggests the following steps be taken to repair the Durashield™ body:

1. Thoroughly clean the surface to be repaired with alcohol and dry.
2. Touch up damaged area with sequential coats (two coats minimum recommended, allowing 30 - 45 minutes between coats, increasing to 45 - 60 minutes in higher humidity) using brush on touch-up paint, until coating layer is visible, slightly above the surface of the part.
3. Use 400 grit “wet” sand paper to blend touch up area level with the rest of the part being repaired. Use a polishing compound (3M Finesse or automotive grade) to renew gloss and to further blend and transition newly painted surface.
4. Clean with alcohol and dry.
5. (Optional but recommended) Follow this process with clear coat to renew and protect depth of finish.
6. Wax or polish with Carnauba base product, available at any automotive parts distributor.

Larger Scratches

For larger scratches, the manufacturer suggests the following steps be taken to repair the Durashield™ body:

1. Thoroughly clean the surface to be repaired with alcohol and dry.
2. Mask the area to be painted (common masking tape is adequate) prior to repair and use aerosol type touch-up paint.
3. Apply spray touch up paint in light even overlapping strokes. Multiple coats may be applied to provide adequate coverage and finish. Always remember to shake the can for a minimum of one minute to mix the paint and achieve the best color match.
4. After painting, allow to dry overnight. Smooth the mask lines using 400 grit “wet” sand paper to blend touch up area level with the rest of the part being repaired. Use a polishing compound (3M Finesse or automotive grade) to renew gloss and to further blend and transition newly painted surface.
5. Clean with alcohol and dry.
6. (Optional but recommended) Follow this process with clear coat to renew and protect depth of finish.
7. Wax or polish with Carnauba base product, available at any automotive parts distributor.

Complete Panel Repair

In situations where large panels or areas must be painted, touch up paint is not recommended. In such cases professional painting or panel replacement is called for. The manufacturer suggests body panel replacement be considered as a cost effective alternative to painting. If the decision to repaint is taken, the task can be accomplished by any paint and body shop with experience in painting ‘TPE’ panels. TPE is a common material in modern automobile bodies and all body shops should be familiar with the materials and processes required.

The finish will include an application of a primer coat, a base color coat and a clear coat. The manufacturer does not supply these materials due to the variety of paint manufacturers and the preferences of the individual painter.

Most paint manufacturers can perform a computer paint match to assure accurate color matching.

Read all of Section B and this section before attempting any procedure. Pay particular attention to Notices, Cautions, Warnings and Dangers.

NOTES:

Read all of Section B and this section before attempting any procedure. Pay particular attention to Notices, Cautions, Warnings and Dangers.

NOTES:

TABLE OF CONTENTS FOR SECTION 'D'

SECTION TITLE **PAGE NO.**

WHEEL AND TIRE SERVICE..... D - 1
Tire Repair ..... D - 1
Wheel Installation..... D - 2

LIST OF ILLUSTRATIONS

Fig. 1 Wheel and Tire Installation .....D - 2

Read all of Section B and this section before attempting any procedure. Pay particular attention to Notices, Cautions, Warnings and Dangers.

NOTES:

Read all of Section B and this section before attempting any procedure. Pay particular attention to Notices, Cautions, Warnings and Dangers.

WHEEL AND TIRE SERVICE

Tools List	Qty.
Lug Wrench, 3/4"	1
Impact Wrench	1
Impact Socket, 3/4"	1
Torque Wrench, ft. lbs.	1

WARNING

To prevent injury caused by a broken socket, use only sockets designed for impact wrench use. Never use a conventional socket.

Tire condition should be inspected per the Periodic Service Schedule. Inflation pressures should be checked when the tires are cool. When removing wheels with an impact wrench, use only impact sockets. Regular sockets are not designed for impact pressures exerted by power tools.

WARNING

A tire explosion can cause severe injury or death. Never exceed inflation pressure rating on tire sidewall.

To prevent tire explosion, pressurize tire with small amount of air applied intermittently to seat beads. Never exceed the tire manufacturer's recommendation when seating a bead. Protect face and eyes from escaping air when removing valve core.

Use caution when inflating tires. Due to the low volume of these small tires, overinflation can occur in a matter of seconds. Overinflation could cause the tire to separate from the wheel or cause the tire to explode, either of which could cause personal injury.

Do not use low inflation pressure tires on any E-Z-GO vehicle. Do not use any tire which has a recommended inflation pressure less than the inflation pressure recommended in Owner's Manual

Use caution when inflating tires. Due to the low volume of these small tires, over inflation can occur in a matter of seconds. Over inflation could cause the tire to separate from the rim or cause the tire to explode, either of which could cause personal injury.

Tire inflation should be determined by the condition of the terrain. See **GENERAL SPECIFICATIONS** section for recommended tire inflation pressure. For outdoor applications with major use on grassy areas, the following should be considered. On hard turf, it is desirable to have a **slightly** higher inflation pressure. On very soft turf, a lower pressure prevents tires from cutting into the turf. For vehicles being used on paved or hard surfaces, tire inflation pressure should be in the higher allowable range, but under no condition should inflation pressure be higher than recommended on tire sidewall. **All four tires** should have the same pressure for optimum handling characteristics. Be careful not to over inflate. Due to the low volume of these small tires, over inflation can occur in a matter of seconds. Be sure to install the valve dust cap after checking or inflating.

Tire Repair

The vehicle is fitted with low pressure tubeless tires mounted on one piece rims.

Generally, the most cost effective way to repair a flat tire resulting from a puncture in the tread portion of the tire is to use a commercial tire plug.

NOTICE

Tire plug tools and plugs are available at most automotive parts outlets and have the advantage of not requiring the tire be removed from the wheel.

If the tire is flat, remove the wheel and inflate the tire to the maximum recommended pressure for the tire. Immerse the tire in water to locate the leak and mark with chalk. Insert tire plug in accordance with manufacturer's specifications.

If tire is to be removed or mounted, the tire changing machine manufacturer's recommendations must be followed in order to minimize possibility of personal injury.

WARNING

To prevent injury, be sure mounting/demounting machine is anchored to floor. Wear OSHA approved safety equipment when mounting/demounting tires.

Read all of Section B and this section before attempting any procedure. Pay particular attention to Notices, Cautions, Warnings and Dangers.

Follow all instructions and safety warnings provided by the mounting/demounting machine manufacturer.

Wheel Installation

CAUTION

Do not tighten lug nuts to more than 85 ft. lbs. (115 Nm) torque.

NOTICE

It is important to follow the 'cross sequence' pattern when installing lug nuts. This will assure even seating of the wheel against the hub.

With the valve stem to the outside, mount the wheel onto the hub with lug nuts. Finger tighten lug nuts as shown. Then, tighten lug nuts to 50 - 85 ft. lbs. (70 - 115 Nm) torque in 20 ft. lbs. (30 Nm) increments following the same pattern.

ITEM NO	TORQUE SPECIFICATION
1	50 - 85 ft. lbs. (70 - 115 Nm)

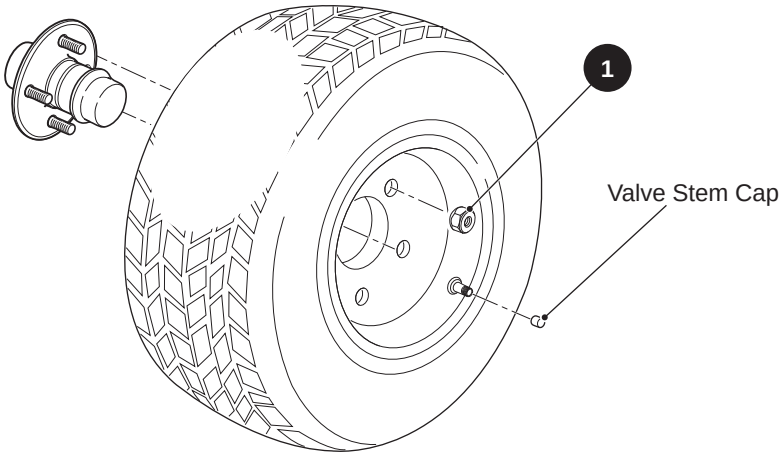

Tire style may vary

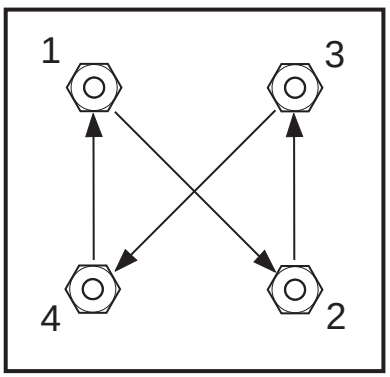

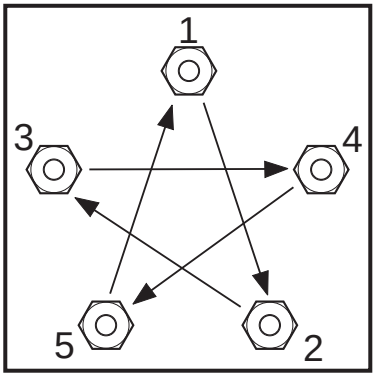

'Cross Sequence'

Fig. 1 Wheel and Tire Installation

Read all of Section B and this section before attempting any procedure. Pay particular attention to Notices, Cautions, Warnings and Dangers.

NOTES:

Read all of Section B and this section before attempting any procedure. Pay particular attention to Notices, Cautions, Warnings and Dangers.

NOTES:

TABLE OF CONTENTS FOR SECTION 'E'

SECTION TITLE **PAGE NO.**

MAINTENANCE ..... E - 2
Lubrication ..... E - 2
Wheel Bearing and King Pin Bushing Inspection ..... E - 2
Wheel Bearing Packing ..... E - 2
Wheel Bearing Adjustment ..... E - 3
Wheel Alignment ..... E - 3

FRONT SUSPENSION ..... E - 5
Front Shock Absorber Replacement ..... E - 5
Front Axle Replacement ..... E - 6
Axle Linkage Rod Replacement ..... E - 6
Front Spring Replacement ..... E - 7
Hub Replacement ..... E - 8
Wheel Bearing and Race Replacement ..... E - 8

STEERING ..... E - 10
Rack Ball Joint Replacement ..... E - 10
Tie Rod Inspection/Replacement ..... E - 11
Bellows Replacement ..... E - 12
Pinion Seal Replacement ..... E - 12
Spindle Replacement ..... E - 13
Rack and Pinion Unit Disassembly and Inspection ..... E - 14
Rack and Pinion Unit Replacement ..... E - 15
Checking/Adjusting Rack Extension-to-Rack and Pinion Unit Clearance ..... E - 15
Steering Wheel Replacement ..... E - 16
Steering Shaft and Column Replacement ..... E - 17

LIST OF ILLUSTRATIONS

Fig. 1 Axle Mounted Steering and Front Suspension ..... E - 1
Fig. 2 Lubrication Points ..... E - 2
Fig. 3 Bearing Adjustment ..... E - 3
Fig. 4 Wheel Alignment ..... E - 4
Fig. 5 Disconnect Intermediate Shaft to Center Steering Wheel ..... E - 4
Fig. 6 Front Suspension Components ..... E - 5
Fig. 7 Axle Linkage Rod Replacement ..... E - 7
Fig. 8 Front Axle Alignment ..... E - 8
Fig. 9 Hub Replacement ..... E - 8
Fig. 10 Seal Installation ..... E - 8
Fig. 11 Wheel Bearing Replacement ..... E - 9
Fig. 12 Steering Components ..... E - 10
Fig. 13 Rack Ball Joint Installation ..... E - 11
Fig. 14 Tie Rod Replacement ..... E - 11
Fig. 15 Bellows Replacement ..... E - 12
Fig. 16 Pinion Seal Replacement ..... E - 13
Fig. 17 Removing Brake Caliper ..... E - 13
Fig. 18 Spindle Replacement. ..... E - 14
Fig. 19 Rack and Pinion Unit Disassembly ..... E - 14
Fig. 20 Spindle Contact with Front Axle ..... E - 16
Fig. 21 Checking Gap ..... E - 16
Fig. 22 Clipboard or Steering Wheel Cover Removal ..... E - 16
Fig. 23 Steering Wheel Replacement ..... E - 17
Fig. 24 Steering Shaft and Column ..... E - 17
Fig. 25 Small Retaining Ring Orientation ..... E - 18

Read all of Section B and this section before attempting any procedure. Pay particular attention to Notices, Cautions, Warnings and Dangers

NOTES:

Read all of Section B and this section before attempting any procedure. Pay particular attention to Notices, Cautions, Warnings and Dangers.

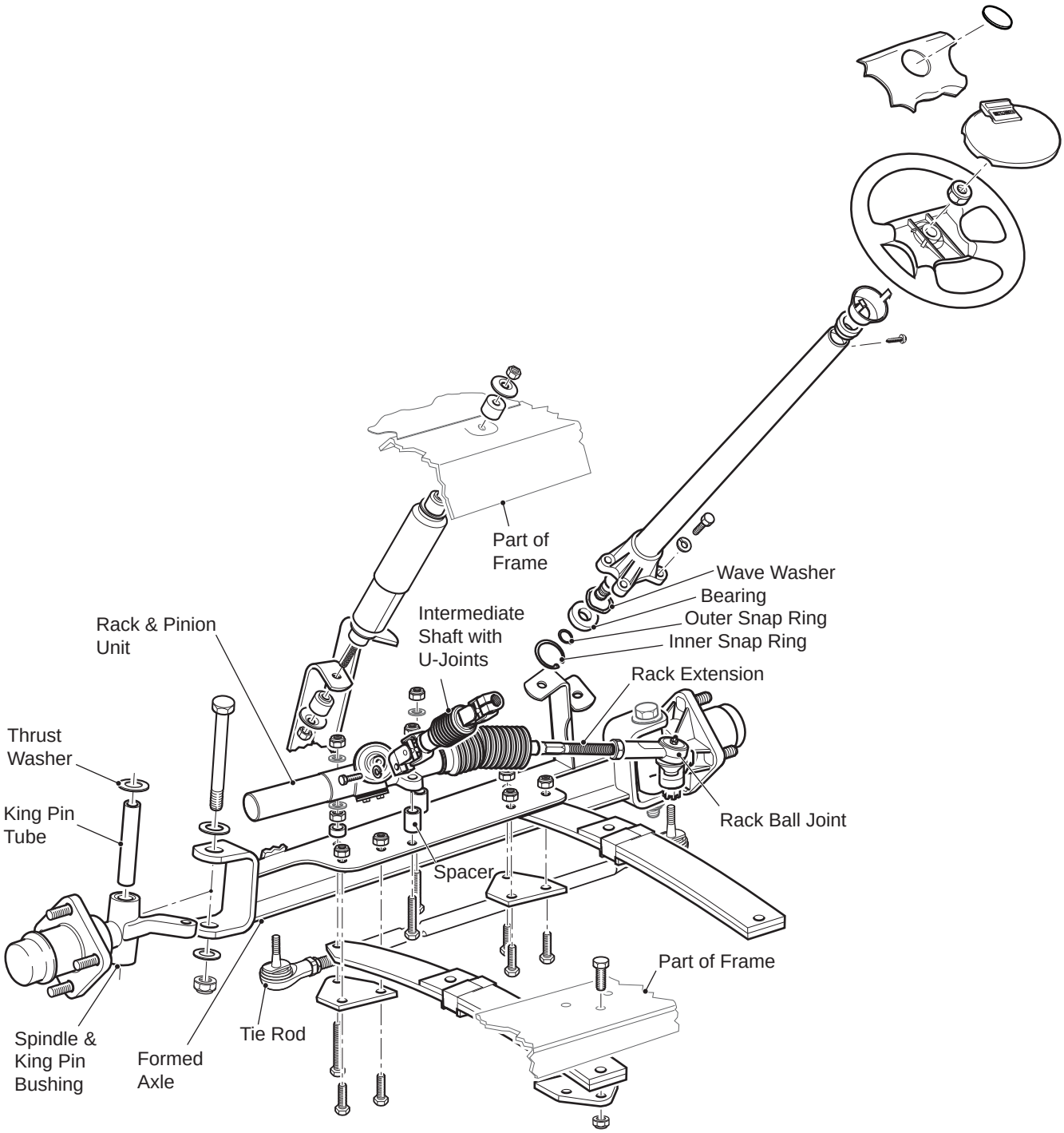

Fig. 1 Axle Mounted Steering and Front Suspension

Read all of Section B and this section before attempting any procedure. Pay particular attention to Notices, Cautions, Warnings and Dangers.

MAINTENANCE

NOTICE

In the following text, there are references to removing/installing bolts etc. Additional hardware (nuts, washers etc.) that is removed must always be installed in its original position unless otherwise specified. Non-specified torque specifications are as shown in the table contained in Section A.

Routine maintenance of the front suspension and steering consists of:

- periodic inspections for loose, worn or damaged components
- alignment checks
- lubrication of ball joints and wheel bearings

See Lubrication Chart and Periodic Service Schedule in Section A. Be sure to use only the recommended lubricants. Maintain correct adjustment of front bearings and repack in accordance with the Periodic Service Schedule or if a bearing replacement is required. Routine examination of tires will provide indications if an alignment is required.

Lubrication

Tool List	Qty.
Grease Gun	1
Shop Towels	AR

Grease the rack ball joint (1) (Ref Fig. 2) per Periodic Service Schedule in Section A. Wipe off old grease and dirt from grease fitting and do not use more than three (3) pumps of grease in any grease fitting. Wipe off any grease that is forced out of rubber boot.

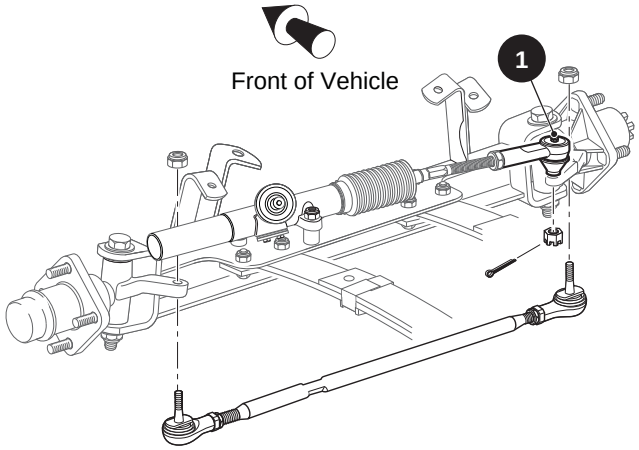

Fig. 2 Lubrication Points

CAUTION

Do not use more than three (3) pumps of grease in any grease fitting at any one time. Excess grease may cause grease seals to fail or grease migration into areas that could damage components.

Wheel Bearing and King Pin Bushing inspection

WARNING

To prevent possible injury or death resulting from a vehicle falling from a jack, follow the lifting procedure in Section B of this manual. Be sure vehicle is on a firm and level surface.

Never get under a vehicle while it is supported by a jack. Use jack stands and test stability of vehicle on stands before starting any repair procedure. Always place chocks in front and behind wheels not being raised. Use extreme care since the vehicle is extremely unstable during the lifting process.

Lift the front of the vehicle and support on jack stands as per SAFETY section. Rotate the front wheel and feel for any roughness. While holding spindle with one hand, grasp bottom of tire with other hand and rock tire back and forth on spindle.

NOTICE

Some minor rocking movement of tire is normal.

if excess movement is detected, the wheel bearing may require repacking and adjusting or replacement. For instructions on 'Wheel Bearing Packing' and 'Wheel Bearing Adjustment' refer to those areas in this section of the manual.

If the wheel bearing is in good condition a worn spindle bearing is indicated. The spindle bearings can not be replaced, the spindle with bearings installed is available through service parts (Ref. “Spindle Replacement” on page E - 13).

Wheel Bearing Packing

Tool List	Qty.
Grease Gun	1
Bearing Packer (Recommended)	1

Read all of Section B and this section before attempting any procedure. Pay particular attention to Notices, Cautions, Warnings and Dangers.

Remove hub from spindle and disassemble. See Illustration “Seal Installation” on page E - 8.

Clean all bearings, grease seal, hub and dust cap in solvent and dry thoroughly. Inspect for signs of damage. Pitting or a blue coloration of the rollers will require replacement of the bearing. If the roller portion of the bearing is to be replaced, the race must also be replaced. “Seal Installation” on page E - 8.

The front wheel bearings are tapered roller type and must be packed with grease at installation or any time the bearing is removed for inspection. It is recommended that a bearing packer attached to a grease gun be used; however, manual packing is acceptable if done correctly. To pack a bearing manually requires that a dab of grease be placed in the palm of the hand and the bearing be dipped in the grease. Force the grease up through and around all of the rollers until the entire bearing is saturated in grease.

Assemble hub and install on spindle. “Hub Replacement” on page E - 8.

NOTICE

Once hub is placed onto spindle and before outer wheel bearing is installed, fill the area between the inner and outer wheel bearings about 1/2 - 3/4 full with grease.

Wheel Bearing Adjustment

Tool List	Qty.
Socket, 1 1/2"	1
Ratchet	1

If performing a wheel bearing adjustment only, lift and support front of vehicle per SAFETY section. Remove dust cap (1) and cotter pin (2) and loosen castellated nut (3).

If performing a wheel bearing adjustment as part of another procedure, make sure wheel is mounted to hub hand tight with lug nuts (4) and hub is loosely retained on spindle (5) with castellated nut (Ref Fig. 3).

Seat bearings by rotating wheel while tightening castellated nut until slight resistance is felt.

Rotate the wheel 2 - 3 more turns to displace excess grease. If required, tighten castellated nut (3) again until slight resistance is felt. If the cotter pin hole in the spindle (5) aligns with a slot in the castellated nut, insert a new cotter pin (2). If the hole does not align, the castellated nut must be **loosened** to align with the **closest available** slot in the nut.

Check for smooth and free rotation of the wheel and an absence of play when the wheel is grasped by the outside of the tire. Bend the cotter pin (2) against the flats of the castellated nut (3).

Replace the dust cap (1) and lower vehicle per SAFETY section.

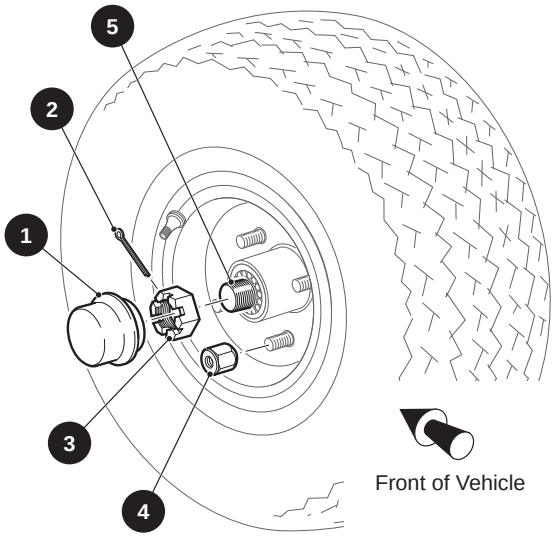

Fig. 3 Bearing Adjustment

If completing a wheel bearing adjustment as part of another procedure, tighten front wheels per WHEELS AND TIRES section.

Wheel Alignment

Tool List	Qty.
Tape Measure	1
Chalk	1
Wrench, 9/16"	1
Wrench, 3/4"	1
Crowfoot Socket, 3/4"	1
Torque Wrench, ft. lbs.	1
Socket, 13 mm,	1
Ratchet	1
Torque Wrench, in. lbs.	1

Lift the front of the vehicle and support on jack stands as per SAFETY section. Confirm the alignment of the front springs. “Front Spring Replacement” on page E - 7.

Rotate each wheel and scribe a chalk line around the circumference of the tire at the center of the tread pattern. Lower vehicle and, with tires in the straight ahead position, roll it forward approximately five feet in order to allow the tires to take their normal running position.

Read all of Section B and this section before attempting any procedure. Pay particular attention to Notices, Cautions, Warnings and Dangers.

Measure the distance between the chalk lines at both the front and rear of the tires (Ref Fig. 4). The measurement taken at the front of the tires should be 0" - 1/8" (0 - 3 mm) less than the rear.

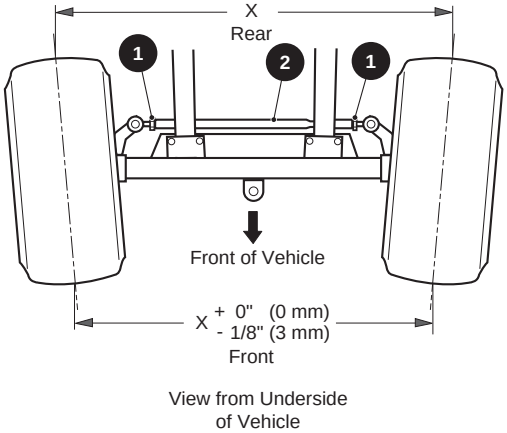

Fig. 4 Wheel Alignment

NOTICE

To hold threaded tube while loosening jam nut, use a wrench on the center, flat section of tube.

The tie rod has different threads on each end. The end **with** the flat area on the threaded tube has left hand threads (clockwise to loosen) while the end **without** the flat has conventional right hand threads (counter-clockwise to loosen).

To adjust wheel alignment, loosen tie rod jam nuts (1) and turn tie rod (2) until correct alignment is achieved. Tighten jam nuts to 36 - 40 ft. lbs. (49 - 54 Nm) torque.

Test drive vehicle and confirm steering wheel is correctly centered. If it is not centered, disconnect intermediate shaft from steering shaft and center steering wheel (Ref Fig. 5). Reconnect intermediate shaft and tighten bolt to 155 - 215 in. lbs. (180 - 250 kg cm) torque.

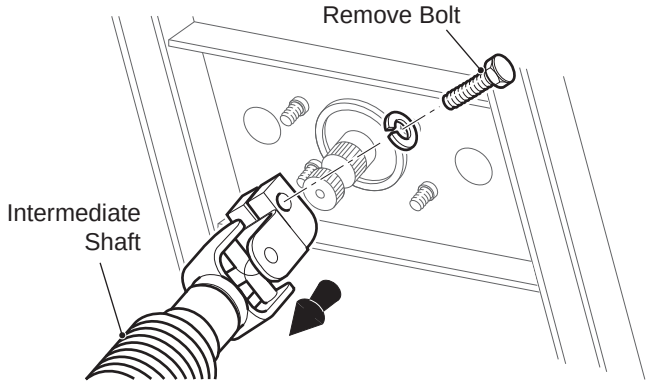

Fig. 5 Disconnect Intermediate Shaft to Center Steering Wheel

Read all of Section B and this section before attempting any procedure. Pay particular attention to Notices, Cautions, Warnings and Dangers.

FRONT SUSPENSION

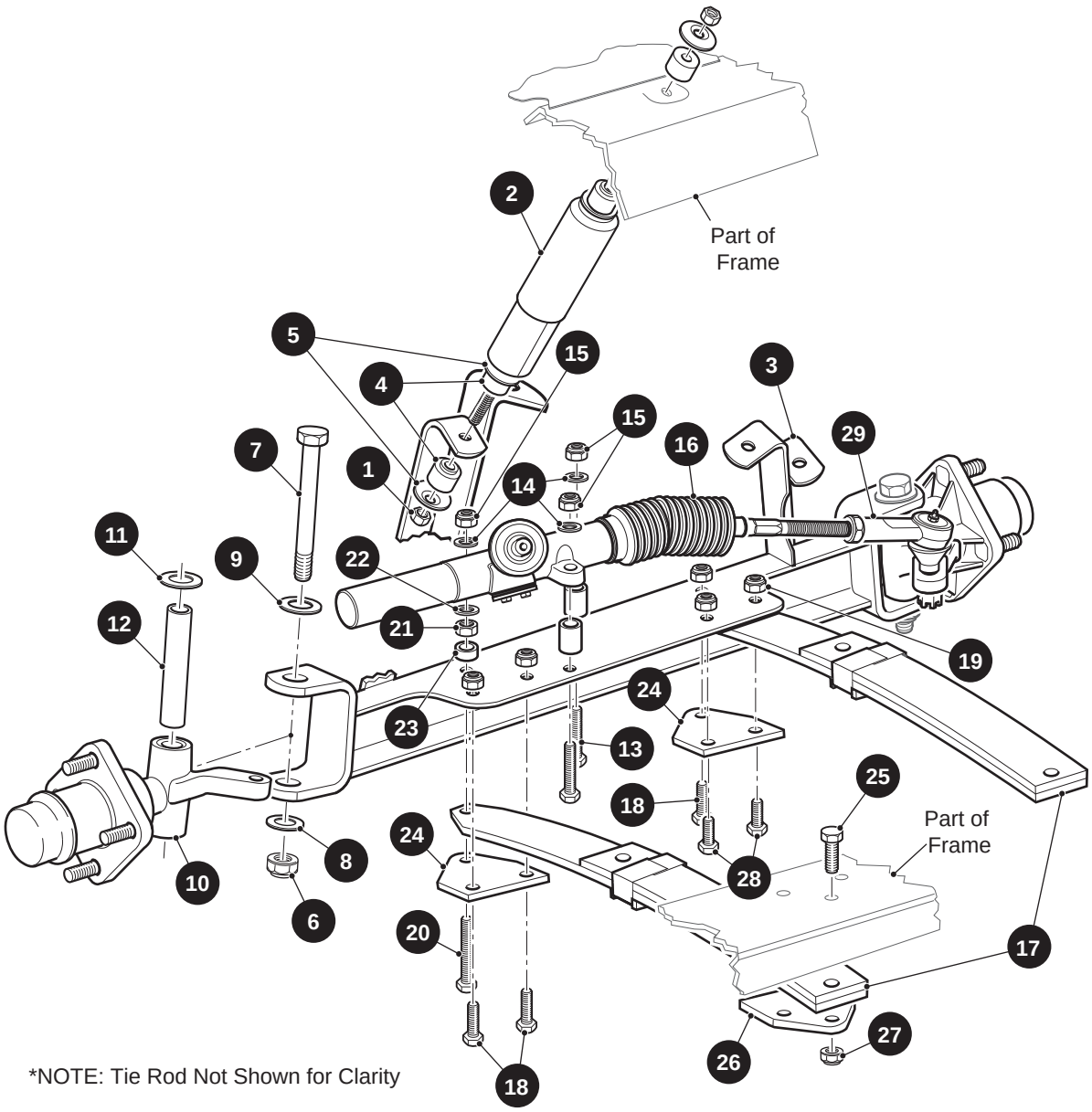

Fig. 6 Front Suspension Components

Front Shock Absorber Replacement

Tool List	Qty.
Wrench, 9/16"	1

Remove the nut (1) from the bottom of the shock absorber (2) at the front axle (3) (Ref Fig. 6).

Compress shock absorber to clear the mounting bracket.

Loosen the nut securing the top of the shock absorber to the vehicle frame and then rotate the shock absorber while holding the nut in place with a wrench.

Remove the shock absorber.

Read all of Section B and this section before attempting any procedure. Pay particular attention to Notices, Cautions, Warnings and Dangers.

Installation of shock absorber is reverse of disassembly. Mounting nuts should be tightened until rubber bushings (4) expand to diameter of shock absorber washers (5).

Front Axle Replacement

Tool List	Qty.
Ratchet	1
Socket, 3/4"	1
Wrench, 9/16"	1
Wrench, 3/4"	1
Plastic Faced Hammer	1
Shop Towels	AR
Wire	AR
Wrench, 5/8"	1
Wrench, 11/16"	1
Socket, 9/16"	1
Socket, 5/8"	1
Torque Wrench, ft. lbs.	1

Loosen front wheels. Lift and support front of vehicle per SAFETY section and remove front wheels.

Remove hardware (1, 4, 5) securing shock absorbers (2) to front axle (3)(Ref Fig. 6).

On the driver side, remove lock nut (6) and washer (8) from bolt (7) and discard nut. Pull bolt (7) and washer (9) from spindle (10) and separate spindle from axle. Remove thrust washer (11) and king pin tube (12) from spindle, wrap towel around spindle and let spindle rest on ground.

Repeat at passenger side letting rack ball joint (29) rest on front spring to support spindle.

WARNING

To prevent possible injury from falling steering components, secure rack and pinion unit (16) to front springs with wire. This will prevent the intermediate shaft connecting the rack and pinion unit to the steering column from pulling apart due to the weight of the steering system.

The intermediate shaft is assembled with the universal joints set 90° out of phase with each other.

Remove hardware (13 - 15) securing rack and pinion unit (16) to front axle and discard lock nuts (15). Move rack and pinion unit back to rest on top of front springs (17). Secure rack and pinion unit to spring with wire to prevent pulling apart intermediate shaft.

Remove the three 1 3/4" long bolts (18), two 1 1/2" long bolts (28), spring plate (24) and five lock nuts (19) securing axle to springs and discard lock nuts. At the 3 1/2" long bolt (20) securing front of left spring, note location of washer (22) and remove it from end of bolt. Remove nut (21), 3 1/2" long bolt (20), spring plate (24) and spacer (23) and retain them for assembly at their original locations.

CAUTION

To prevent stress and possible damage to the rack and pinion unit, the axle must first be mounted to the springs with the hardware (20 - 23) installed in its original location (Ref Fig. 6).

To prevent damage to bellows (16), the two 1 1/2" long bolts (28) must be installed in their original location.

Front axle installation is the reverse order of disassembly using new lock nuts (15, 19). All hardware (18 - 24, 28) must be installed in its original location (Ref Fig. 6).

Tighten leaf spring and rack and pinion unit hardware (13 - 15,18 - 21, 28) to 35 - 50 ft. lbs. (50 - 70 Nm) torque.

Install thrust washers (11), king pin tubes (12), spindles, washers (9) and bolts (7). Tighten new lock nuts (6) to 56 - 70 ft. lbs. (75 - 95 Nm) torque. Check that spindle turns freely on king pin tube after tightening.

Tighten shock absorber mounting hardware until rubber bushings expand to diameter of shock absorber washer.

Install front wheels per WHEELS AND TIRES section and lower vehicle per SAFETY section.

Check front wheel alignment and adjust if necessary. “Wheel Alignment” on page E - 3.

Axle Linkage Rod Replacement

Raise the front of the vehicle (See Lifting Vehicle). Remove old axle linkage rod by removing each ball joint nut (Ref Fig. 7). Check axle alignment (Ref Fig. 8). Adjust length of new axle linkage rod until it will pass through and seat in the hole in the front axle assembly and the rear spring plate without resistance. Tighten the ball joint nuts to 20 - 25 ft. lbs. (27 - 33 Nm) torque and rod jam nut to 20 - 25 ft. lbs. (27 - 33 Nm) torque. Lower the vehicle.

Read all of Section B and this section before attempting any procedure. Pay particular attention to Notices, Cautions, Warnings and Dangers.

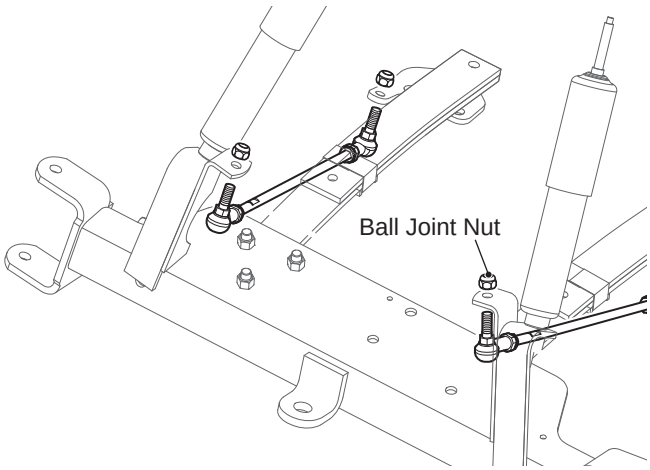

Fig. 7 Axle Linkage Rod Replacement

Front Spring Replacement

Tool List	Qty.
Jack Stands	4
Ratchet	1
Socket, 3/4"	1
Socket, 5/8"	1
Wrench, 5/8"	1
Torque Wrench ft. lbs.	1
Tape Measure	1

NOTICE

Failure of a single spring will result in overstressing the other spring; therefore, replace front springs as a set.

The following procedure will replace one spring at a time.

Loosen front wheels. Lift and support front of vehicle per SAFETY section. In addition, support front axle with jack stands. Remove front wheels.

To detach driver side spring:

Fully loosen the two rack and pinion unit lock nuts (15), one near the bellows and one on the rear side of the rack and pinion unit, until only one thread is engaged (Ref Fig. 6). Remove the lock nut (15) and washer (14) from the long bolt (20) and discard lock nut. The rack and pinion unit is now loose.

Remove the two 1 3/4" long bolts (18) and lock nuts (19) securing driver side spring to axle and discard lock nuts (19).

Hold nut (21) with wrench and loosen long bolt (20). Note location of washer (22) and thread long bolt out as far as possible to remove the washer, nut and spacer (23). Then pull long bolt and spring plate (24) from axle and spring. Retain above items (20 - 24) for assembly at their original locations.

Pull upper driver side of floor mat out of plastic trim retainer and away from floor. Locate and remove hardware (25 - 27) securing rear of spring (17) to vehicle frame and discard lock nuts (27).

⚠ CAUTION

To prevent stress and possible damage to the rack and pinion unit, the driver side spring must be mounted to the axle with the hardware (20 - 23) installed in its original location (Ref Fig. 6).

Driver side spring installation is the reverse order of disassembly making sure to install the long bolt (20), spring plate (24), spacer (23), nut (21) and washer (22) in their original locations. Use new lock nuts (15, 19, 27) to secure the rack and pinion unit (16), two short bolts (18) and rear bolts (25).

To detach passenger side spring:

Remove the hardware (18, 19, 24, 28) securing the front of the passenger side leaf spring (17) to the axle (3) and discard lock nuts (19) (Ref Fig. 6).

Pull upper passenger side of floor mat out of plastic trim retainer and away from floor. Locate and remove hardware (25 - 27) securing rear of spring (17) to vehicle frame and discard lock nuts (27).

Using new lock nuts (19, 27), install passenger side spring in the reverse order of disassembly.

NOTICE

After the springs are replaced, the axle will need to be aligned to the frame. Unless the axle has been replaced, wheel alignment will not be affected; however, it is always good practice to check wheel alignment any time the front-end components are replaced or adjusted.

When front springs are replaced, the front axle must be aligned to the frame. The distance from the center bolt at rear of left spring to the center bolt at front of right spring must be the same as the distance from the center bolt at rear of right spring to the center bolt at front of left spring (Ref Fig. 8). Tighten the spring hardware (21, 19, 27) first and rack and pinion unit hardware (15) next to 35 - 50 ft. lbs. (50 - 70 Nm) torque.

Read all of Section B and this section before attempting any procedure. Pay particular attention to Notices, Cautions, Warnings and Dangers.

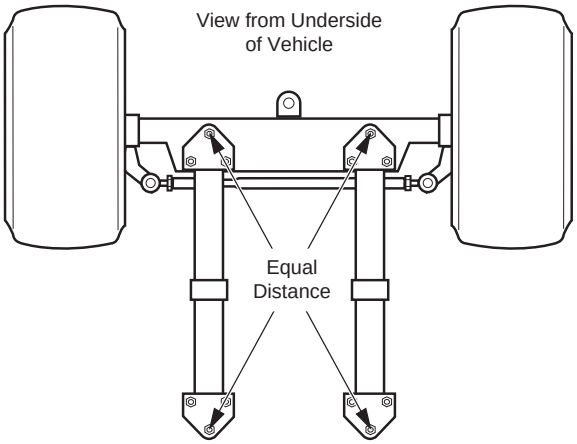

Fig. 8 Front Axle Alignment

Replace upper portion of floor mat in plastic trim retainers. Install front wheels per WHEELS AND TIRES section and lower vehicle per SAFETY section.

Check front wheel alignment and adjust if necessary. “Wheel Alignment” on page E - 3.

Hub Replacement

Tool List	Qty.
Socket, 3/4"	1
Ratchet	1
Straight Blade Screwdriver	1
Ball Peen Hammer	1
Needle Nose Pliers	1
Socket, 1 1/2"	1
Wheel Bearing Grease	AR
Seal Driver	1

Loosen front wheel(s). Lift and support front of vehicle per SAFETY section and remove front wheel(s).

Remove the dust cap (1), cotter pin (2) and castellated nut (3) (Ref Fig. 9). While holding outer wheel bearing (4) in place, slide hub (5) from spindle (6) and discard.

Clean spindle and new hub thoroughly with solvent.

Pack new bearings with grease. “Wheel Bearing Packing” on page E - 2.

Apply a light coat of grease to inner race and place inner wheel bearing (7) in hub. Orient new grease seal (8) so the flange side of the seal is facing into the bore. Tap gently into place until seal is flush with end of hub. Lubricate lips of seal and spindle with grease (Ref Fig. 10).

Place new hub onto spindle and fill the area between the two wheel bearings about 1/2 - 3/4 full with grease and apply a light coating to the outer bearing race.

Install outer wheel bearing (4) and secure hub loosely with castellated nut. Place wheel onto hub and hand tighten lug nuts.

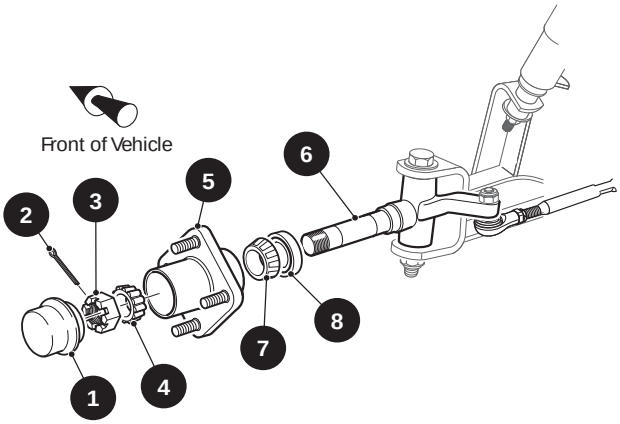

Fig. 9 Hub Replacement

Adjust bearing. “Wheel Bearing Adjustment” on page E - 3.

Replace the dust cap (1).

Lower vehicle per SAFETY section and tighten front wheel(s) per WHEELS AND TIRES section.

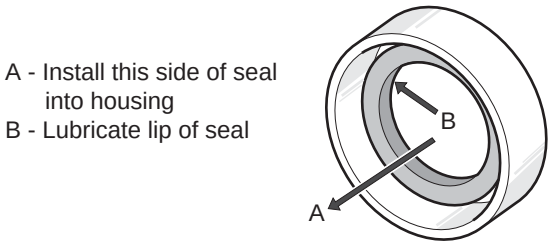

Fig. 10 Seal Installation

Wheel Bearing and Race Replacement

Tool List	Qty.
Non-Ferrous Punch	1
Ball Peen Hammer	1
Bearing Driver	1

Remove hub (1) from spindle (Ref Fig. 11). “Hub Replacement” on page E - 8.

Remove the grease seal (3), inner wheel bearing (4) and bearing races (5) by tapping, through the other side of hub, the bearing race using a hammer and a soft non-ferrous punch. Tap race in a circular pattern while moving from side to side to avoid damaging bore of hub.

Clean outer wheel bearing (6), inner wheel bearing (4), hub and dust cap (7) in solvent and dry thoroughly. Inspect for signs of damage. Pitting or a blue coloration

Read all of Section B and this section before attempting any procedure. Pay particular attention to Notices, Cautions, Warnings and Dangers.

of the rollers requires replacement of the bearing. If the roller portion of the bearing is to be replaced, the race must also be replaced.

To install race (5), make sure bore of hub (1) is clean and place new race over bore of hub. Evenly tap with hammer and bearing driver to drive race fully in bore. Repeat on other side of hub.

Clean spindle (2) and pack new bearings with grease. “Wheel Bearing Packing” on page E - 2.

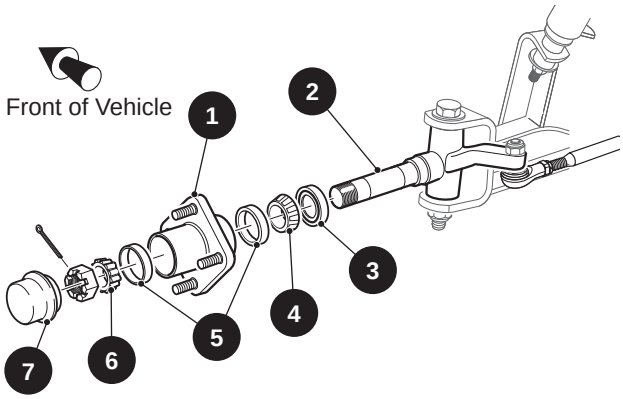

Fig. 11 Wheel Bearing Replacement

Install inner wheel bearing (4) and new grease seal in hub and mount hub to spindle. “Hub Replacement” on page E - 8 Adjust bearing. “Wheel Bearing Adjustment” on page E - 3.

Replace the dust cap (7).

Lower vehicle per SAFETY section and tighten front wheel(s) per WHEELS AND TIRES section.

Read all of Section B and this section before attempting any procedure. Pay particular attention to Notices, Cautions, Warnings and Dangers.

STEERING

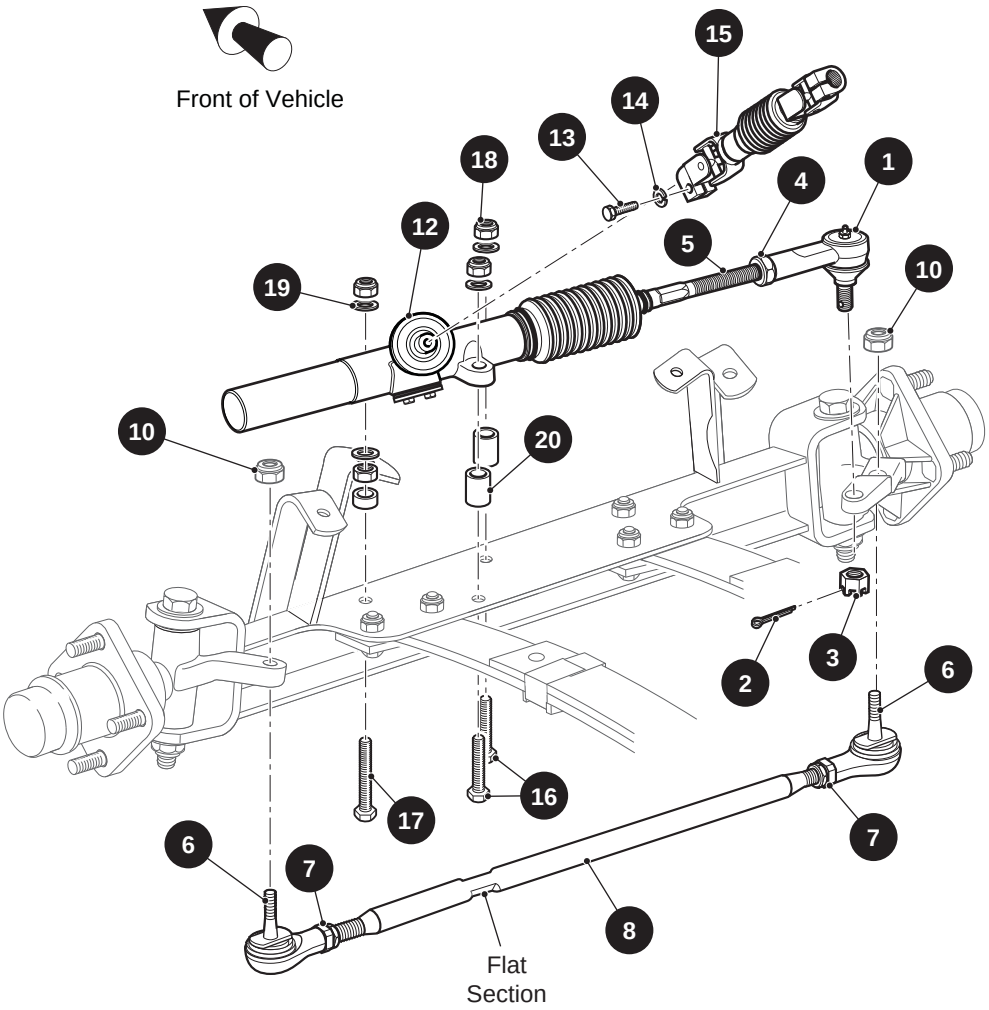

Fig. 12 Steering Components

Rack Ball Joint Replacement

Tool List	Qty.
Needle Nose Pliers	1
Wrench, 11/16"	1
Ball Joint Separator	1
Plastic Faced Hammer	1
Tape Measure	1
Wrench, 3/4"	1
Torque Wrench, ft. lbs.	1
Socket, 11/16"	1

To remove rack ball joint (1), loosen passenger side front wheel and lift and support front of vehicle per SAFETY section (Ref Fig. 12).

Remove passenger side front wheel and turn steering wheel fully to the left.

Remove the cotter pin (2) and loosen the castellated nut (3) until rack ball joint (1) threads are protected. Using a ball joint separator as a lever, apply pressure to ball joint and tap nut with plastic faced hammer to release ball joint from passenger side spindle arm. Remove nut from ball joint and ball joint from spindle arm.

Read all of Section B and this section before attempting any procedure. Pay particular attention to Notices, Cautions, Warnings and Dangers.

To install new rack ball joint close to its correct position, measure amount of threads exposed from jam nut (Ref Fig. 13).

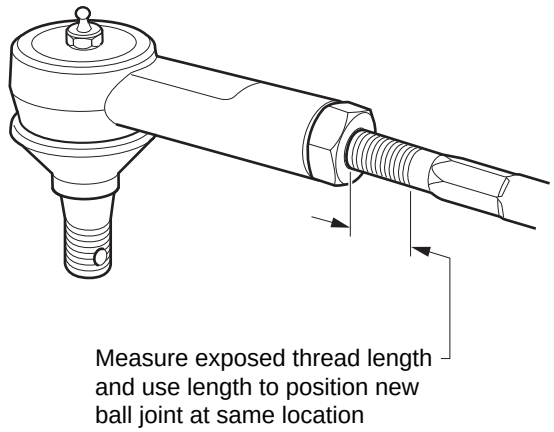

Fig. 13 Rack Ball Joint Installation

Loosen jam nut (4) and remove rack ball joint from rack extension (5).

Using measurement made earlier, thread jam nut and new rack ball joint to previous location on rack extension and set jam nut hand tight.

Attach rack ball joint to spindle arm. Tighten castellated nut (3) to 36 ft. lbs. (50 Nm) torque and continue to tighten as needed to insert new cotter pin (2). Maximum torque is 50 ft. lbs. (70 Nm).

CAUTION

After replacing or servicing steering components, always verify that an 1/8" gap exists between large hex of rack extension and rack and pinion unit when steering is turned fully to the right forcing passenger spindle arm against front axle (Ref Fig. 21).

Check for proper rack extension-to-rack and pinion unit clearance before tightening jam nut (4) to 35 - 45 ft. lbs. (47 - 61 Nm) torque. “Checking/Adjusting Rack Extension-to-Rack and Pinion Unit Clearance” on page E - 15.

Install passenger side front wheel per WHEELS AND TIRES section and lower vehicle per SAFETY section.

Check front wheel alignment and adjust if necessary. “Wheel Alignment” on page E - 3.

Tie Rod Inspection/Replacement

Tool List	Qty.
Tape Measure	1
Wrench, 3/4"	1
Wrench, 9/16"	1
Needle Nose Pliers	1
Wrench, 11/16"	1
Ball Joint Separator	1
Plastic Faced Hammer	1
Socket, 11/16"	1
Torque Wrench, ft. lbs.	1
Crowfoot Socket, 3/4"	1

Grasp the tie rod (8) at ball joints (6) and check for any vertical motion which would indicate a worn condition and require replacement (Ref Fig. 12).

To remove tie rod, loosen wheels and lift and support front of vehicle per SAFETY section.

Remove front wheel.

To install new tie rod ball joint close to its correct position, measure the exposed thread length from jam nut (Ref Fig. 14).

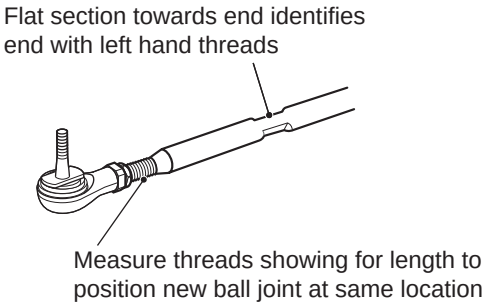

Fig. 14 Tie Rod Replacement

Loosen jam nut (7) at threaded tube (8).To hold threaded tube while loosening jam nut, use a wrench on the center, flat section of tube (Ref Fig. 12).

NOTICE

The tie rod has different threads on each end. The end **with** the flat area on the threaded tube has left hand threads (clockwise to loosen) while the end **without** the flat has conventional right hand threads (counter-clockwise to loosen) (Ref Fig. 14).

Remove lock nut (10) until tie rod ball joint (6) threads are protected. Using a ball joint separator as a lever, apply pressure to ball joint and tap nut with plastic faced

Read all of Section B and this section before attempting any procedure. Pay particular attention to Notices, Cautions, Warnings and Dangers.

hammer to release tie rod from spindle arm. Remove nut to drop tie rod from spindle arm.

Unscrew tie rod ball joint and jam nut from threaded tube.

NOTICE

To install ball joint, first thread on new jam nut and then, using measurement made earlier, screw ball joint to previous location in threaded tube. Set jam nut hand tight.

The distance to center of tie rod ball joint from jam nut on both ends of threaded tube should be the same.

Attach tie rod to spindle. The lock nut (10) should be tightened to a **minimum** of 36 ft. lbs. (50 Nm) torque. Maximum torque is 50 ft. lbs. (70 Nm).

Install front wheel(s) per WHEELS AND TIRES section and lower vehicle per SAFETY section.

A worn tie rod is likely to have caused incorrect wheel alignment. Check front wheel alignment and adjust if necessary. “Wheel Alignment” on page E - 3.

Jam nut should be tightened to 36 - 40 ft. lbs. (49 - 54 Nm) torque.

Bellows Replacement

Tool List	Qty.
Needle Nose Pliers	1
Wrench, 11/16"	1
Ball Joint Separator	1
Plastic Faced Hammer	1
Tape Measure	1
Wrench, 3/4"	1
Wire Cutters	1
Wire Tie, 8" Long	1
Torque Wrench, ft. lbs.	1
Socket, 11/16"	1

To replace bellows (1) (Ref Fig. 15), first loosen passenger side front wheel and lift and support front of vehicle per SAFETY section.

Remove passenger side front wheel and turn steering wheel fully to the left.

Remove rack ball joint (2) and jam nut (3) from rack extension (4). “Rack Ball Joint Replacement” on page 10

Cut wire ties (5,6) and slide bellows off rack extension. Install new bellows aligning small end over groove in rack extension and secure with new wire tie (5). Leave large end loose until rack extension-to-rack and pinion unit clearance is checked or adjusted.

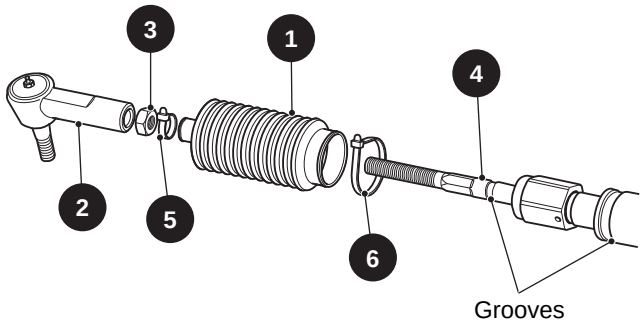

Fig. 15 Bellows Replacement

Install jam nut (3) and rack ball joint (2) on rack extension (4) and reattach to spindle arm. “Rack Ball Joint Replacement” on page 10.

CAUTION

After replacing or servicing steering components, always verify that an 1/8" gap exists between large hex of rack extension and rack and pinion unit when steering is turned fully to the right forcing passenger spindle arm against front axle.

Check for proper rack extension-to-rack and pinion unit clearance before tightening jam nut (3) to 35 - 45 ft. lbs. (47 - 61 Nm) torque. “Checking/Adjusting Rack Extension-to-Rack and Pinion Unit Clearance” on page E - 15.

Install passenger side front wheel per WHEELS AND TIRES section and lower vehicle per SAFETY section.

Check front wheel alignment and adjust if necessary. “Wheel Alignment” on page E - 3.

Pinion Seal Replacement

Tool List	Qty.
Vice	1
Straight Blade Screwdriver, Small	1
Ball Peen Hammer	1
Sandpaper, 600 Grit	AR
Shop Towel	AR
Wheel Bearing Grease	AR
Socket, 1 1/2"	1

CAUTION

Secure rack and pinion unit in vice by the mounting ears only. The rack and pinion unit is made of aluminum and can be damaged if held otherwise.

Read all of Section B and this section before attempting any procedure. Pay particular attention to Notices, Cautions, Warnings and Dangers.

To access the pinion seal, remove rack and pinion unit from vehicle. “Rack and Pinion Unit Replacement” on page E - 15 Anchor in vice by clamping on the mounting ears of the rack and pinion unit.

Slide a small straight blade screwdriver between lip of seal and pinion and pry top portion of seal up to remove (Ref Fig. 16).

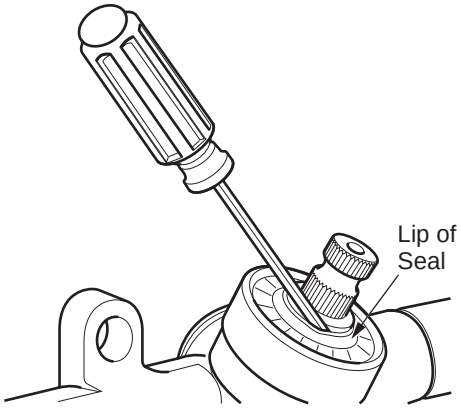

Fig. 16 Pinion Seal Replacement

Use screwdriver to lift inner portion of seal up and off pinion.

Check pinion surface for roughness and sand lightly if needed.

NOTICE

Wipe bore clean and lubricate pinion and lip of seal with grease.
The bore has a positive stop to correctly locate the seal during installation.

Place seal over pinion and tap carefully with socket and hammer to start seal straight in bore. Drive seal fully into bore until it stops and wipe clean of any excess grease.

Attach rack and pinion unit to front axle. “Rack and Pinion Unit Replacement” on page E - 15.

Spindle Replacement

Tool List	Qty.
Needle Nose Pliers	1
Wrench, 11/16"	1
Ball Joint Separator	1
Plastic Faced Hammer	1
Wrench, 3/4"	1
Socket, 3/4"	1
Socket, 11/16"	1
Torque Wrench, ft. lbs.	1

CAUTION

The spindle bearings are designed to be used “dry”. Lubrication attracts dirt and will ruin the bearings. Do not apply grease to the spindle bearings.

Loosen front wheel. Lift and support front of vehicle per SAFETY section and remove front wheel.

If vehicle is equipped with front disc brakes, remove caliper by removing bolts (1) and washers (2). Secure the caliper with a length of wire, cord or wire tie to relieve any tension that would be created by the caliper hanging from the brake line.

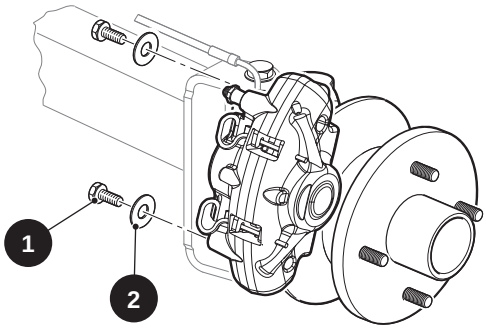

Fig. 17 Removing Brake Caliper

To remove tie rod, loosen lock nut (2) until tie rod ball joint (3) threads are protected (Ref Fig. 18). Using a ball joint separator as a lever, apply pressure to ball joint and tap nut with plastic faced hammer to release tie rod from spindle arm (4). Remove nut from tie rod and tie rod from spindle arm.

If removing passenger side spindle, repeat previous step for rack ball joint.

Remove lock nut (5) and washer (7) from bolt (6) and discard nut. Pull bolt (6) and washer (8) from spindle and separate spindle from axle. Remove thrust washer (9) and king pin tube (10) from spindle.

Spindle installation is the reverse order of disassembly.

Read all of Section B and this section before attempting any procedure. Pay particular attention to Notices, Cautions, Warnings and Dangers.

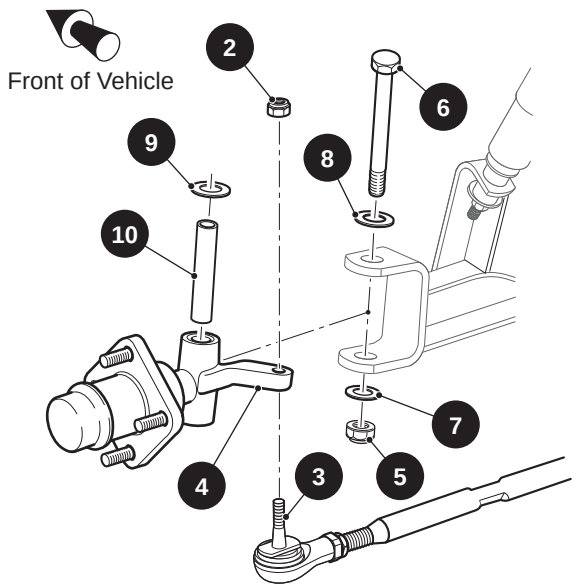

Fig. 18 Spindle Replacement

NOTICE

The thrust washer (9) is located on top of spindle between spindle and front axle.

Tighten new lock nut (5) to 56 - 70 ft. lbs. (75 - 95 Nm) torque. Check that spindle turns freely on king pin tube after tightening.

Tighten lock nut (2) to 36 ft. lbs. (50 Nm). Maximum torque is 50 ft. lbs. (70 Nm).

Install front wheels per WHEELS AND TIRES section and lower vehicle per SAFETY section.

Check front wheel alignment and adjust if necessary. “Wheel Alignment” on page E - 3.

Rack and Pinion Unit Disassembly and Inspection

Tool List	Qty.
Vice	1
Socket, 3/8"	1
Ratchet	1
Wrench, 11/16"	1
Wrench, 3/4"	1
Wire Cutter	1
Retaining Ring Pliers	1
Shop Towel	AR
CITGO Lithoplex MP No. 2 grease	AR
Wire Tie, 8" Long	1
Wire Tie, 10" Long	1
Torque Wrench, in. lbs.	1

NOTICE

The rack and pinion gears are not serviceable items. If they are found to be damaged or excessively worn, a new rack and pinion unit must be installed.

⚠ CAUTION

Secure rack and pinion unit in vice by the mounting ears only. The rack and pinion unit is made of aluminum and can be damaged if held otherwise.

Remove rack and pinion unit from vehicle. Anchor in vice by clamping on the mounting ears of the unit.

Disassemble rack and pinion unit (1) by first removing screw (13) and tensioner (2) to relieve pressure on rack (3) and pinion (4) (Ref Fig. 19). Loosen jam nut (5) and remove rack ball joint (6) from rack extension (7). Cut wire ties (8, 14) securing bellows (9) and slide bellows off rack extension. Pull rack (3) from unit (1). Remove pinion seal (10). “Pinion Seal Replacement” on page E - 12 Remove internal retaining ring (11) from rack and pinion unit and pull out pinion (4) and ball bearing (12) as an assembly.

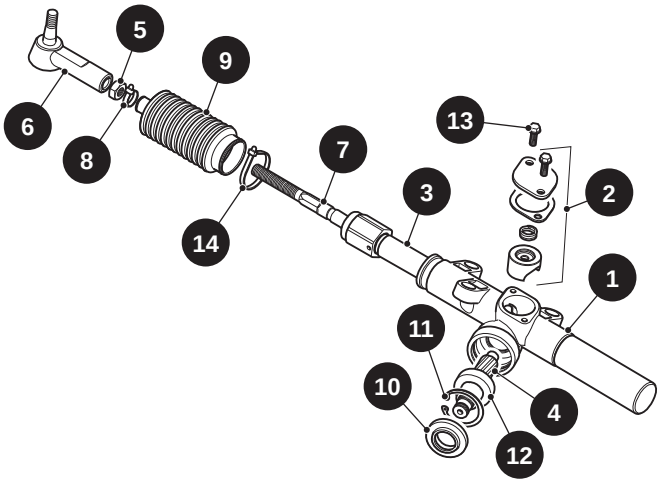

Fig. 19 Rack and Pinion Unit Disassembly

Clean rack, pinion and housing. Inspect gear teeth, bearing surfaces and grease seal surfaces of rack and pinion for excessive wear or damage. If any is found, the rack and pinion unit **must be** replaced as an assembly. “Rack and Pinion Unit Replacement” on page E - 15

Read all of Section B and this section before attempting any procedure. Pay particular attention to Notices, Cautions, Warnings and Dangers.

If rack and pinion pass inspection, clean them, tensioner and housing thoroughly and lubricate for assembly. Use grease specified in tool list.

Assemble rack and pinion unit by first installing pinion in reverse order of removal making sure to lubricate pinion seal lip prior to installing seal. “Pinion Seal Replacement” on page E - 12 Insert rack into rack and pinion unit. Turn pinion clockwise to help pull rack in if necessary. Install bellows and secure to rack extension with wire tie (8). **Do not** secure large end of bellows to rack and pinion unit until instructed to do so after setting proper rack extension-to-rack and pinion unit clearance. Install tensioner and tighten bolts (13) to 100 - 120 in. lbs. (11 - 14 Nm) torque. Thread jam nut and rack ball joint to original location on rack extension and set jam nut hand tight.

Install rack and pinion unit on vehicle. “Rack and Pinion Unit Replacement” on page E - 15.

CAUTION

After replacing or servicing steering components, always verify that an 1/8" gap exists between large hex of rack extension and rack and pinion unit when steering is turned fully to the right forcing passenger spindle arm against front axle.

Set proper rack extension-to-rack and pinion unit clearance. “Checking/Adjusting Rack Extension-to-Rack and Pinion Unit Clearance” on page E - 15.

Rack and Pinion Unit Replacement

Tool List	Qty.
Socket, 13 mm	1
Ratchet	1
Needle Nose Pliers	1
Wrench, 11/16"	1
Ball Joint Separator	1
Plastic Faced Hammer	1
Wrench, 5/8"	1
Socket, 5/8"	1
Ratchet	1
Torque Wrench, ft. lbs.	1
Socket, 11/16"	1
Torque Wrench, in. lbs.	1

To remove rack and pinion unit (12) (Ref Fig. 12), loosen front wheels and lift and support front of vehicle per SAFETY section. Remove front wheels.

Remove bolt (13) and washer (14) securing intermediate shaft (15) to rack and pinion unit (12).

Remove cotter pin (2) and loosen castellated nut (3) until rack ball joint (1) threads are protected. Using a ball joint separator as a lever, apply pressure to ball joint and tap nut with plastic faced hammer to release ball joint from passenger side spindle arm. Remove nut from ball joint and ball joint from spindle arm.

Remove the three lock nuts (18) securing rack and pinion unit to front axle and discard nuts. The rack and pinion unit can now be removed from vehicle. Retain washers (19), spacers (20) and the two bolts (16) for assembly.

Replace rack and pinion unit in reverse order of removal.

Use new lock nuts (18) and tighten them to 35 - 50 ft. lbs. (50 - 70 Nm) torque.

Tighten castellated nut (3) to 36 ft. lbs. (50 Nm) torque and continue to tighten as needed to insert new cotter pin. Maximum torque is 50 ft. lbs. (70 Nm).

Tighten bolt (13) securing intermediate shaft to pinion to 155 - 215 in. lbs. (180 - 250 kg cm) torque.

CAUTION

After replacing or servicing steering components, always verify that an 1/8" gap exists between large hex of rack extension and rack and pinion unit when steering is turned fully to the right forcing passenger spindle arm against front axle.

Set proper rack extension-to-rack and pinion unit clearance. “Checking/Adjusting Rack Extension-to-Rack and Pinion Unit Clearance” on page E - 15.

Install front wheels per WHEELS AND TIRES section and lower vehicle per SAFETY section.

Check front wheel alignment and adjust if necessary. “Wheel Alignment” on page E - 3.

Checking/Adjusting Rack Extension-to-Rack and Pinion Unit Clearance

Tool List	Qty.
Wrench, 11/16"	1
Wrench, 3/4"	1
Wrench, 1/2"	1
Wire Cutter	1
Washer, 1/8" Thick	1
Crowfoot Socket, 3/4"	1
Torque Wrench, ft. lbs.	1
Wire Tie, 10" long	1

Read all of Section B and this section before attempting any procedure. Pay particular attention to Notices, Cautions, Warnings and Dangers.

Check for proper rack extension-to-rack and pinion unit clearance by first turning steering wheel fully to the right. The rear spindle arm on the passenger side **must rest against** the front axle (Ref Fig. 20). If it does not, all adjustment is made at the rack ball joint (6) (Ref Fig. 19). Loosen jam nut (5) at rack ball joint and use wrench to thread shaft of rack extension (7) further into rack ball joint. This will provide more travel for the steering wheel to be turned to the right.

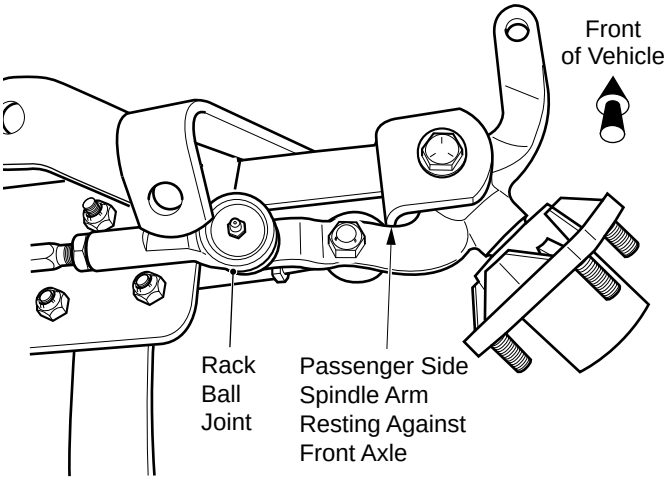

Fig. 20 Spindle Contact with Front Axle

With spindle arm resting against front axle, cut wire tie (14) securing bellows (9) to rack and pinion unit (1) and slide bellows away from rack and pinion unit to see large hex of rack extension. An 1/8" gap should exist between the large hex and the end of the rack and pinion unit.

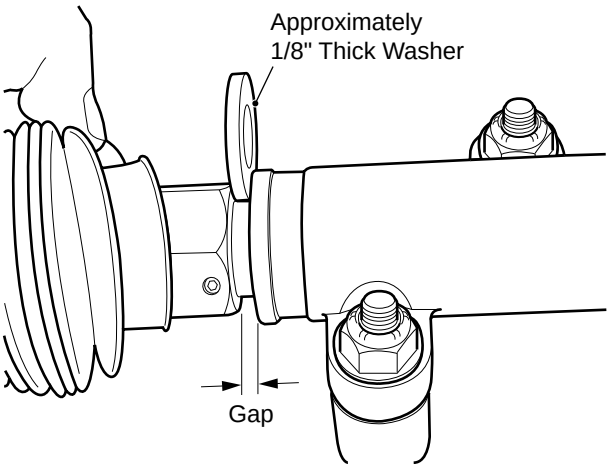

Fig. 21 Checking Gap

Adjust, using an 1/8" thick washer as a gauge, by turning shaft of rack extension with wrench to create the 1/8" gap. Tighten jam nut (5) to 35 - 45 ft. lbs. (47 - 61 Nm) torque. Secure bellows to rack and pinion unit with new wire tie (14).

Steering Wheel Replacement

Tool List	Qty.
Socket, 15/16"	1
Ratchet, 1/2" drive	1
Plastic Faced Hammer	1
Ball Peen Hammer	1
Anti-seize Compound	1
Torque Wrench, ft. lbs.	1

NOTICE

To maintain correct orientation when replacing steering wheel, first turn wheels straight ahead.

⚠ CAUTION

To prevent damage to the clipboard or steering wheel cover, perform the following removal procedure. Do not use a screwdriver to push or pry the retaining tabs.

From the front side of the steering wheel (4), remove the clipboard (5) or steering wheel cover (3) by first pulling straight up on the bottom of the clipboard or Steering wheel cover to release the two bottom retaining tabs. Then, using thumb for leverage as shown, reach from behind steering wheel with fingertips to first pull down, and then push up to release the two top clipboard or steering wheel cover retaining tabs (Ref Fig. 22).

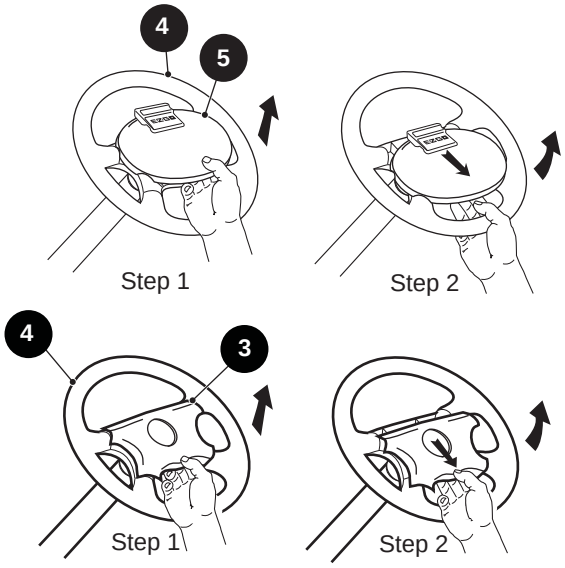

Fig. 22 Clipboard or Steering Wheel Cover Removal

Read all of Section B and this section before attempting any procedure. Pay particular attention to Notices, Cautions, Warnings and Dangers.

Loosen the steering wheel retaining nut (6) two to three turns (Ref Fig. 23). DO NOT REMOVE NUT AT THIS TIME. Apply upward pressure to the steering wheel. Place a plastic faced hammer against the steering wheel nut and strike plastic faced hammer sharply with a ball peen hammer.

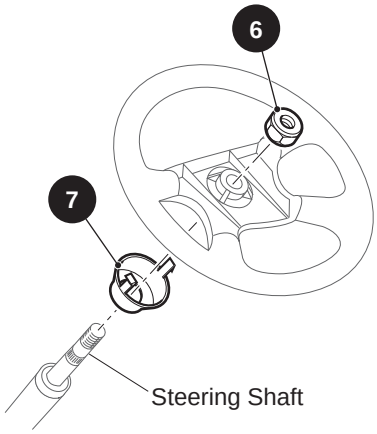

Fig. 23 Steering Wheel Replacement

CAUTION

Do not strike steering nut or end of steering shaft directly with ball peen hammer. Internal damage to rack and pinion unit can result.

When steering wheel is loosened, remove retaining nut and remove steering wheel.

Prior to replacement, assemble the replacement steering wheel by aligning the retaining tabs on the rear collar hub (7) with slots in back of steering wheel. Squeeze tabs to allow insertion of hub. **Do not force**. Squeeze hub on top and bottom to fully seat.

Replace steering wheel by first lightly coating the splines of the steering shaft with a commercially available anti-seize compound. With the vehicle wheels in the straight ahead position, align the steering wheel on the steering shaft and slide wheel on shaft. Tighten the steering wheel nut (6) to 15 - 20 ft. lbs. (20 - 27 Nm) torque.

Inspect the four retaining tabs on the clipboard (5) for white stress lines (Ref Fig. 22). If stress lines are present, replace clipboard. Install by carefully pressing, first the top two, then the bottom two retaining tabs into the matching slots in steering wheel.

Steering Shaft and Column Replacement

Tool List	Qty.
Ratchet	1
Socket, 3/4"	1
Socket, 13 mm	1
Ratchet	1
Socket, 9/16"	1
Snap RIng Pliers	1
Bearing Separator	1
Gear Puller	1
Arbor Press	1
Bearing Driver Set	1
Torque Wrench, ft. lbs.	1
Torque Wrench, in. lbs.	1
Wheel Bearing Grease	AR

To remove steering shaft (4) (Ref Fig. 24), remove the steering wheel. “Steering Wheel Replacement” on page E - 16

Loosen front wheels. Lift and support front of vehicle per SAFETY section and remove front wheels.

Remove the bolt (1) and washer (2) that secures the intermediate shaft (3) to the steering shaft (4).

Steering Shaft

Remove the four bolts (5) and washers (6) that secure the steering column (7) to the chassis and remove the column.

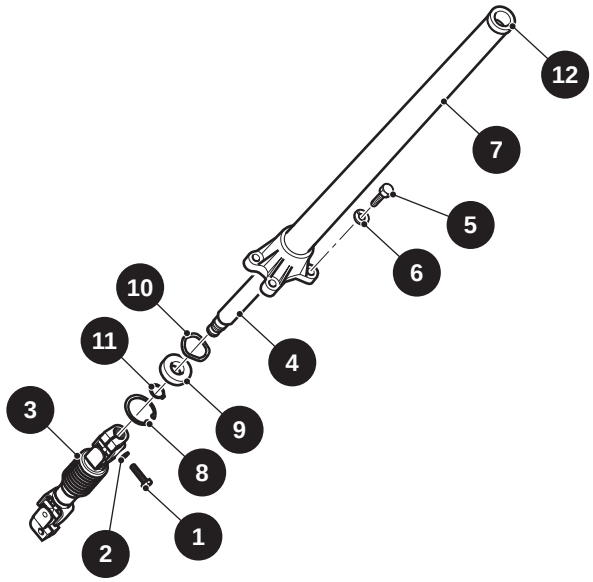

Fig. 24 Steering Shaft and Column

Remove large retaining ring (8) on bottom end of column and pull shaft and bearing (9) out as an assembly. Slide wave washer (10) out bottom end of steering column and keep for reuse.

Read all of Section B and this section before attempting any procedure. Pay particular attention to Notices, Cautions, Warnings and Dangers.

Remove small retaining ring (11) and press bearing from steering shaft.

To assemble steering shaft, first press new bearing onto shaft until it stops against shoulder. Then, with small retaining ring oriented with arch up, slide ring onto shaft as far as possible using snap ring pliers (Ref Fig. 25). Use fingers to push retaining ring fully into groove.

Slide wave washer into base of steering column.

To install steering shaft and bearing assembly, apply wheel bearing grease to lip of seal in bushing (12) at top of column and press steering shaft and bearing assembly into column base. Secure with large retaining ring making sure it is fully seated in groove of column.

Place steering column on vehicle and tighten column bolts (5) to 29 ft. lbs. (39 Nm) torque.

Tighten bolt (1) securing intermediate shaft to steering shaft to 156 - 216 in. lbs. (17 - 25 Nm) torque.

Install front wheel(s) per WHEELS AND TIRES section and lower vehicle per SAFETY section.

Install steering wheel. “Steering Wheel Replacement” on page E - 16.

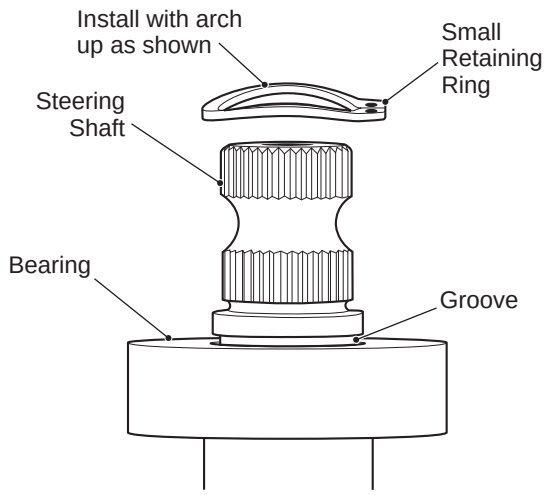

Fig. 25 Small Retaining Ring Orientation

Read all of Section B and this section before attempting any procedure. Pay particular attention to Notices, Cautions, Warnings and Dangers.

NOTES:

Read all of Section B and this section before attempting any procedure. Pay particular attention to Notices, Cautions, Warnings and Dangers.

NOTES:

TABLE OF CONTENTS FOR SECTION 'F'

SECTION TITLE **PAGE NO.**

SYSTEM OPERATION ..... F - 1
Pedal Box Operation ..... F - 1
Governor Operation ..... F - 2

TROUBLESHOOTING ..... F - 2

SPEED CONTROL ..... F - 2
Accelerator Cable Removal at Governor ..... F - 2
Accelerator Cable Removal at Pedal Box ..... F - 3
Accelerator Cable Installation ..... F - 3
Accelerator Cable Adjustment ..... F - 3
Throttle Rod Removal ..... F - 3
Throttle Rod Adjustment ..... F - 3

PEDAL BOX ADJUSTMENTS ..... F - 4
Accelerator Pedal Arm Adjustment ..... F - 4
Micro Switch Adjustment ..... F - 4
Road Test ..... F - 5

LIST OF ILLUSTRATIONS

Fig. 1 Accelerator and Speed Control System ..... F - 1
Fig. 2 Governor Cover Removal ..... F - 2
Fig. 3 Accelerator Cable at Governor ..... F - 3
Fig. 4 Pedal Box Access ..... F - 3
Fig. 5 Accelerator Cable at Pedal Box ..... F - 3
Fig. 6 Throttle Rod Removal ..... F - 3
Fig. 7 Throttle Rod Adjustment ..... F - 4
Fig. 8 Accelerator Pedal Arm Adjustment ..... F - 4
Fig. 9 Pedal Box Micro Switch ..... F - 4

Read all of Section B and this section before attempting any procedure. Pay particular attention to Notices, Cautions, Warnings and Dangers

NOTES:

Read all of Section B and this section before attempting any procedure. Pay particular attention to Notices, Cautions, Warnings and Dangers.

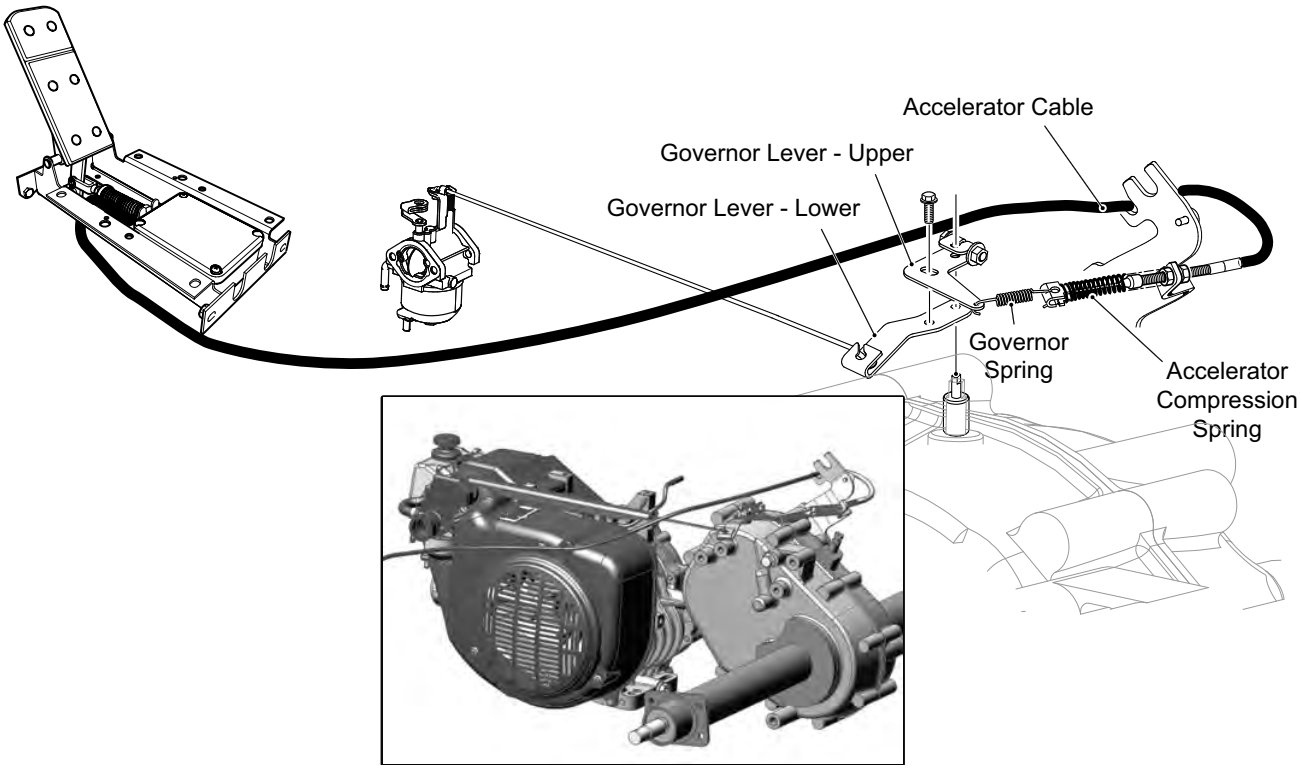

Fig. 1 Accelerator and Speed Control System

SYSTEM OPERATION

Pedal Box Operation

As the accelerator pedal is depressed, the accelerator rod moves towards the rear of the vehicle by overcoming the resistance of the accelerator return spring (Ref Fig. 1).

As the accelerator pedal moves, the parking brake is released, the micro switch closes and activates the ignition circuit.

The rear end of the accelerator rod is joined to the micro switch cam which connects to the accelerator cable.

As the micro switch cam moves to the rear it pulls the accelerator cable, which pulls against the governor spring.

When the accelerator cable pulls against the accelerator cable/governor spring, the spring extends until it overcomes the resistance exerted by the governor mechanism. As the governor spring overcomes these forces, the governor arm moves and the motion is transferred through linkage rod to the carburetor throttle plate.

NOTICE

The linkages that control the accelerator mechanism, governor and carburetor are designed to operate as an integrated assembly. Any adjustment to one portion of the system will have an effect on the other components within the system. In the following text, there are references to removing and installing bolts and other fasteners. Additional hardware (nuts, washers, etc.) that are removed must always be installed in their original positions unless otherwise specified. Non-specified torques are shown in the table in Section A.

⚠ WARNING

To prevent possible injury or death, follow the lifting procedure in Section B of this manual. Place wheel chocks in front and behind the rear wheels. Check the stability of the vehicle on the jack stands before starting any repair procedure. Never work on a vehicle that is supported by a jack alone.

Read all of Section B and this section before attempting any procedure. Pay particular attention to Notices, Cautions, Warnings and Dangers.

Governor Operation

Until the vehicle reaches its governed speed, the vehicle will continue to accelerate in relation to the accelerator pedal position. When the governed speed is reached, the ground speed governor in the rear axle assembly operates against the governor spring and closes the carburetor until the correct governed speed is achieved (Ref Fig. 1).

It is the force of the governor spring in response to accelerator pedal and governor arm position which controls the position of the carburetor throttle plate. This spring cushions sudden changes in throttle linkage position to provide smooth power transmission.

WARNING

Driving above governed speed could cause a loss of vehicle control and possible injury or death.

Tampering with or adjusting the governor or other speed control components will void the warranty.

TROUBLESHOOTING

Erratic acceleration and performance that does **not** include a notable increase in governed speed, may indicate the need for a linkage adjustment.

Symptoms that include an increase in governed speed indicate:

- A possible governor failure within the rear axle.
- Worn components in the governor system.
- Improper adjustment of linkage system.

NOTICE

Other factors may effect the performance characteristics of the vehicle but they should be investigated only after confirming the linkage adjustment.

SPEED CONTROL

Tool List	Qty.
Phillips Screwdriver	1
Flat Blade Screwdriver	1
Needle Nose Pliers	1
Slip Joint Pliers	1
Open End Wrench, 10 mm"	2
Ratchet	1
Socket, 15 mm	1
Torque Wrench, in. lbs	1
Torque Wrench, ft. lbs	1
Drill, 1/4"	1
Drill Bit, 3/16"	1
Rivet Gun	1

WARNING

Remove the negative (-) battery cable at the battery to prevent the vehicle moving and the possible personal injury that may result. Refer to section 'B' of this manual for additional cautions and warnings.

NOTICE

Be sure to follow the sequence indicated when making linkage adjustments.

Accelerator Cable Removal at Governor

Remove the governor cover (2) by drilling out the rivet securing the cover on the passenger side and loosening the hex head bolt (3) on the driver side of the vehicle.

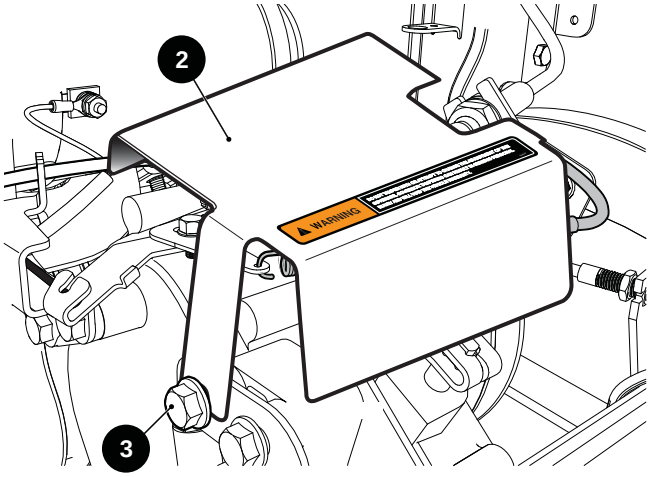

Fig. 2 Governor Cover Removal

To remove the accelerator cable (9) from the governor, loosen the nuts (13) securing the cable to the accelerator cable bracket (14) at the rear axle and unhook the spring from the upper governor lever (15).

Read all of Section B and this section before attempting any procedure. Pay particular attention to Notices, Cautions, Warnings and Dangers.

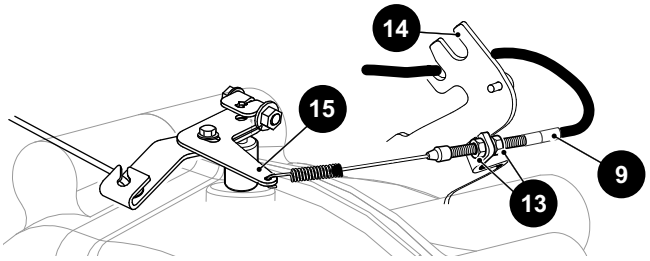

Fig. 3 Accelerator Cable at Governor

Accelerator Cable Removal at Pedal Box

To access the micro switch, remove the rocker panel (4), lift the floor mat (5) and remove the access cover (6) from the floor. Remove the screws (7) and cover (8) from the pedal box.

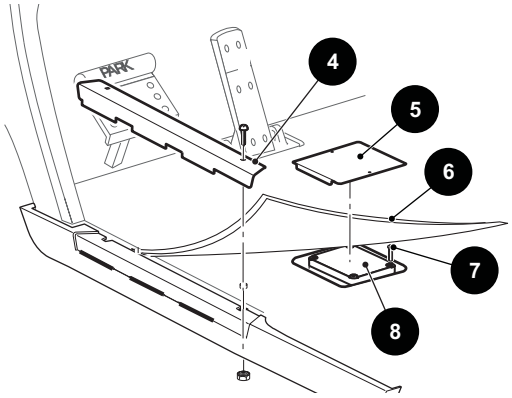

Fig. 4 Pedal Box Access

To remove the accelerator cable socket from the accelerator pedal box (11), remove the box cover (8) and unsnap the cable end (9) from the micro switch cam (10). With a pair of pliers, pinch the cable fitting to compress the sides sufficient to push cable fitting through accelerator pedal box.

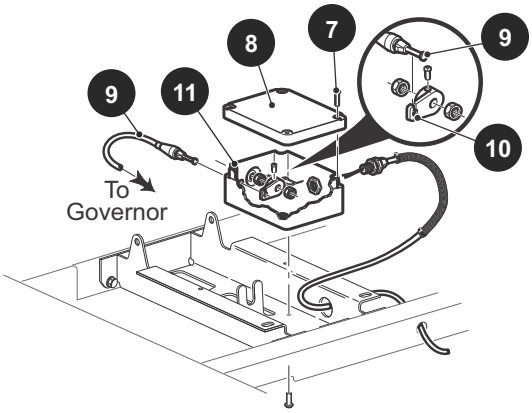

Fig. 5 Accelerator Cable at Pedal Box

Accelerator Cable Installation

To install the accelerator cable, proceed in reverse order (Ref Fig. 3)(Ref Fig. 4)(Ref Fig. 5).

ITEM	TORQUE SPECIFICATION
3	30 - 33 ft. lbs. (40 - 44 Nm)
13	35 - 44 in. lbs. (4 - 5 Nm)

Accelerator Cable Adjustment *(Ref Fig. 3)*

To adjust the accelerator cable, position the cable in the accelerator cable bracket at the rear axle so that the throttle is fully closed while allowing 1" travel at the top of the accelerator pedal. Once correctly positioned, tighten the cable securing nuts (13) on the bracket.

Throttle Rod Removal

To remove the throttle rod from the carburetor throttle plate (Ref Fig. 6), twist the plastic connector (1) counter-clockwise away from the throttle rod, line up the slot with the tabs on the rod and remove the rod from the carburetor throttle lever by lifting up (2).

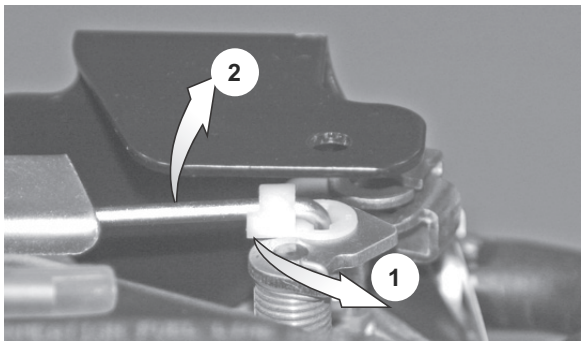

Fig. 6 Throttle Rod Removal

Throttle Rod Adjustment

To adjust the throttle rod (17), loosen the bolt (18) between the two governor levers and rotate lower governor lever (19) counter-clockwise until the carburetor throttle plate is fully open and rotate upper governor lever (20) counter-clockwise until it stops then tighten bolt that locks the governor levers in position.

Read all of Section B and this section before attempting any procedure. Pay particular attention to Notices, Cautions, Warnings and Dangers.

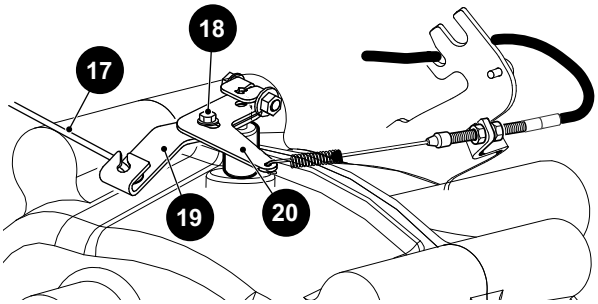

Fig. 7 Throttle Rod Adjustment

ITEM	TORQUE SPECIFICATION
18	60 - 72 in. lbs. (7 - 8 Nm)

PEDAL BOX ADJUSTMENTS

Tool List	Qty.
Needle Nose Pliers	1
Phillips Screwdriver	1
Open End Wrench, 9/16"	1
Open End Wrench, 1/2"	1
Open End Wrench, 7/16"	1
Open End Wrench, 3/8"	1
Allen Wrench, 1/8"	1

NOTICE

If any adjustments are made in the pedal box or accelerator area, it is necessary to go back and perform the speed control cable adjustment again. This **must** be done because any adjustment made in the pedal box or accelerator area will inadvertently affect the cables.

Accelerator Pedal Arm Adjustment

Lift front of vehicle using procedures and safety information in SAFETY section.

Confirm the accelerator pedal arm (1) contacts the accelerator pedal bracket (2) when in the released position (Ref Fig. 8). If there is no contact, loosen the jam nut (3) and rotate the rod (4) until contact is made.

NOTICE

Note that the factory applies a thread sealant to the accelerator rod threads before threading the rod into the clevis.

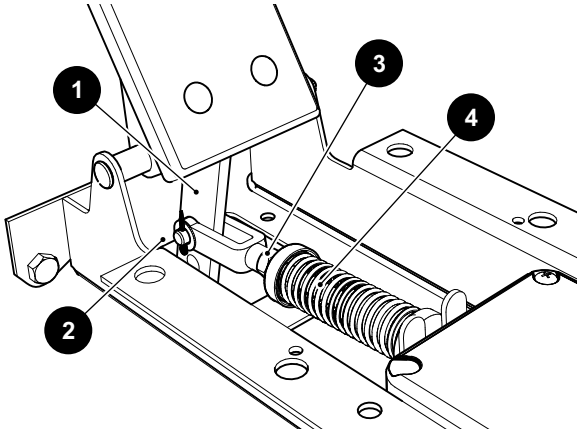

Fig. 8 Accelerator Pedal Arm Adjustment

Micro Switch Adjustment

When the system is in correct adjustment, the micro switch in the accelerator pedal box will click when the top of the accelerator pedal moves approximately 1/2" - 5/8" (13 - 16 mm). The accelerator cable (as seen at the rear axle) should have some slack present and not show any movement until after the micro switch clicks.

To access the micro switch, remove the rocker panel, lift the floor mat and remove the access cover from the floor (Ref Fig. 4). Remove the screws (8) and cover (7) from the pedal box (Ref Fig. 9).

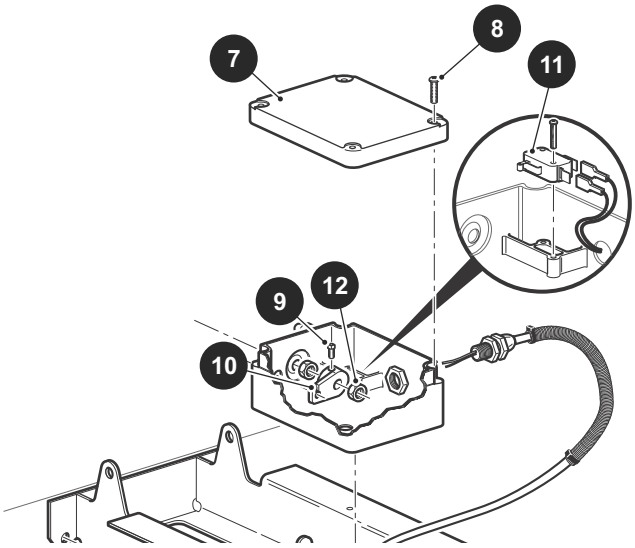

Fig. 9 Pedal Box Micro Switch

Read all of Section B and this section before attempting any procedure. Pay particular attention to Notices, Cautions, Warnings and Dangers.

Loosen the setscrew (9) in cam (10) using an 1/8" Allen wrench. Loosen the jam nut (12) and move the cam to adjust as needed (Ref Fig. 9). Adjust to permit 1/2" - 5/8" (13 - 16 mm) of accelerator pedal travel before the micro switch (11) clicks. Measure the distance at the top of the pedal with the pedal arm contacting the pedal bracket. Making sure the setscrew in the cam does not contact the micro switch actuator. Tighten the setscrew (9) and the jam nut (12) to the specified torque.

ITEM	TORQUE SPECIFICATION
9	45 - 55 in. lbs. (5 - 6 Nm)
12	10 - 11 ft. lbs. (14 - 15 Nm)

Be sure the accelerator pedal moves smoothly and the accelerator cable pulls smoothly on the governor arm.

Replace the cover on the pedal box. Tap lightly to set the cover before installing screws. Replace the access cover on the floor. Replace floormat and rocker panel.

Road Test

Install the negative (-) battery cable.

Test drive the vehicle and confirm that the compression spring adjustment results in the maximum governed speed specified in the GENERAL SPECIFICATIONS section. Determine speed by measuring the time it takes to travel a known set distance with vehicle at maximum speed. Enter time and distance into this formula to calculate speed: **Rate (in MPH) = (Distance in feet / 5280) / (Time in seconds / 3600)** or **Rate (in KPH) = (Distance in meters / 1000) / (Time in seconds / 3600)**. For example: (300 ft. / 5280) / (13.6 sec. / 3600) = 15 MPH or (100 m / 1000) / (15 sec. / 3600) = 24 KPH. If the speed is not within the specified speed range, stop the vehicle and adjust the governor compression spring as described in procedure above.

Repeat the test and adjustment until the factory recommended governed speed is achieved. Tightening the spring results in a speed increase while loosening it will result in a speed decrease.

Read all of Section B and this section before attempting any procedure. Pay particular attention to Notices, Cautions, Warnings and Dangers.

NOTES:

TABLE OF CONTENTS FOR SECTION 'G'

SECTION TITLE **PAGE NO.**

POWERTRAIN MAINTENANCE ..... G - 1
Checking the Oil Level ..... G - 1
Changing the Oil ..... G - 1

AIR FILTER INSPECTION/REPLACEMENT ..... G - 3
Cleaning the Air Filter Element ..... G - 3

STARTER/GENERATOR BELT TENSION ..... G - 4
Adjusting the Belt ..... G - 4

STARTER/GENERATOR REPLACEMENT ..... G - 5

COOLING SYSTEM CLEANING ..... G - 6

SPARK PLUG ..... G - 6

FOUR CYCLE ENGINE ..... G - 7
Engine Specifications ..... G - 7
Engine Description ..... G - 7

CYLINDER HEAD ..... G - 7
Compression Measurement ..... G - 7
Rocker Cover Removal ..... G - 8
Valve Clearance Inspection ..... G - 8
Valve Clearance Adjustment ..... G - 8

ENGINE REMOVAL ..... G - 9
Controls and Wiring ..... G - 10
Removing the Engine from the Vehicle ..... G - 10
Engine Installation ..... G - 10

DRIVE CLUTCH REMOVAL ..... G - 10

LIST OF ILLUSTRATIONS

Fig. 1 Oil Dipstick ..... G - 1
Fig. 2 Check Oil Level on Dipstick ..... G - 1
Fig. 3 Oil Viscosity Chart ..... G - 2
Fig. 4 Cleaning Top of Engine ..... G - 2
Fig. 5 Drain oil Plug ..... G - 2
Fig. 6 Remove Oil Filter ..... G - 2
Fig. 7 Inspect Oil Filter ..... G - 3
Fig. 8 Add Engine Oil ..... G - 3
Fig. 9 Air Filter Assembly ..... G - 3
Fig. 10 Checking Belt Tension with Gauge ..... G - 4
Fig. 11 Checking Belt tension with Finger ..... G - 4
Fig. 12 Starter/Generator ..... G - 5
Fig. 13 Adjusting the Belt Tension ..... G - 5
Fig. 14 Starter/Generator Wire Connections ..... G - 6
Fig. 15 Starter/Generator Wiring Table ..... G - 6
Fig. 16 Cleaning Cooling System with Air ..... G - 6
Fig. 17 Gapping the Spark Plug ..... G - 7
Fig. 18 Compression Gauge ..... G - 7
Fig. 19 Rocker Cover ..... G - 8
Fig. 20 Measure Valve Clearance ..... G - 8
Fig. 21 Valve Clearance Adjustment ..... G - 9

Read all of Section B and this section before attempting any procedure. Pay particular attention to Notices, Cautions, Warnings and Dangers

NOTES:

Read all of Section B and this section before attempting any procedure. Pay particular attention to Notices, Cautions, Warnings and Dangers.

For further engine information, see Engine Shop Rebuild and Service Parts Manual.

POWERTRAIN MAINTENANCE

Access the powertrain by raising or removing seat. Some service procedures may require the vehicle be lifted. Refer to LIFTING THE VEHICLE in section 'B' for proper lifting procedure and safety information.

Checking the Oil Level

CAUTION

Do not overfill engine. Too much oil may cause smoking or allow oil to enter the air filter enclosure.

NOTICE

Vehicles with the leaf springs mounted on top of the rear axle will have an oil dipstick with an 'H' stamped into the top.

The oil should be checked with the engine warm. The vehicle should be on a level surface with the parking (PARK) brake engaged. Allow adequate time for oil to drain into the crankcase before checking.

Remove the oil dipstick and wipe off the entire area with a lint free cloth (Ref. Fig. 1).

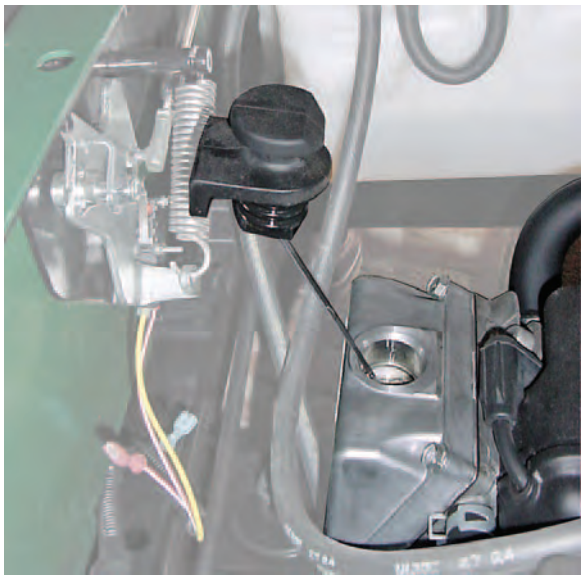

Fig. 1 Oil Dipstick

Insert the dipstick **fully** into the dipstick opening and remove. Examine the level of the oil on the dipstick.

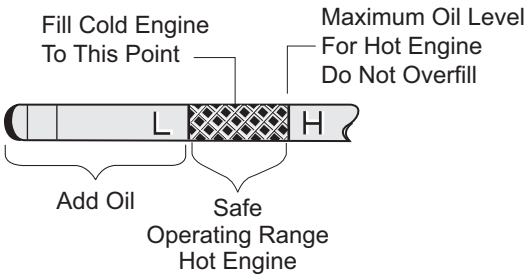

Fig. 2 Check Oil Level on Dipstick

The engine can be operated safely as long as oil is within the safe operating range as indicated on the dip stick. **Do not operate vehicle if oil level is below the safe area indicated on the dipstick.**

Oil should be added to bring the level into the safe operating range. Remember that oil expands as it gets hot, **Do not overfill** (Ref. Fig. 2). Check that the oil cap is firmly in place.

NOTICE

When adding oil between oil changes, do not mix brands and viscosity grades of oil.Both the oil dipstick and fill cap must be in place before operating the engine. Failure to install the dipstick and fill cap will result in oil becoming contaminated and/or oil being discharged into the engine compartment.

Changing the Oil

Tool List	Qty.
Socket, 19 mm	1
Ratchet	1
Extension, 8"	1
Oil Drain Pan	1
Oil Filter Wrench	1

For maximum performance and longevity, the engine oil should be replaced after the first 8 hours of operation. After the initial oil change, it should be changed every 125 hours of operation or semi-annually, whichever comes first.

The selection of oil is dependent upon the service that the vehicle will perform. Most vehicles require 10W-30 oil, whereas vehicles used at capacity or near capacity load applications will utilize 10W-40 oil after a break-in period of 8 hours (Ref. Fig. 3).

Read all of Section B and this section before attempting any procedure. Pay particular attention to Notices, Cautions, Warnings and Dangers.

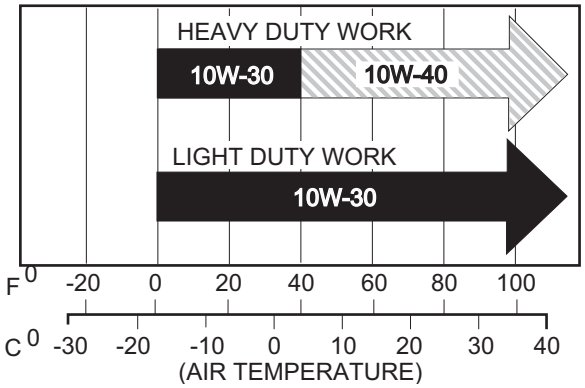

Fig. 3 Oil Viscosity Chart

NOTICE

If vehicle is to be stored over winter months, it can be stored with old oil left in engine. The oil should be changed as part of spring maintenance. This will remove any moisture that has accumulated during storage.

⚠ WARNING

Be aware that engine fluids may be hot and contact to the skin may cause severe burns. Wear rubber gloves to protect skin from exposure to the old oil and degreaser.

The oil should be changed with engine warm. Park vehicle on a level surface, engage parking brake and remove key. Place a drain pan under engine. Wipe top of the engine clean with a cloth (Ref. Fig. 4). Remove the oil fill cap.

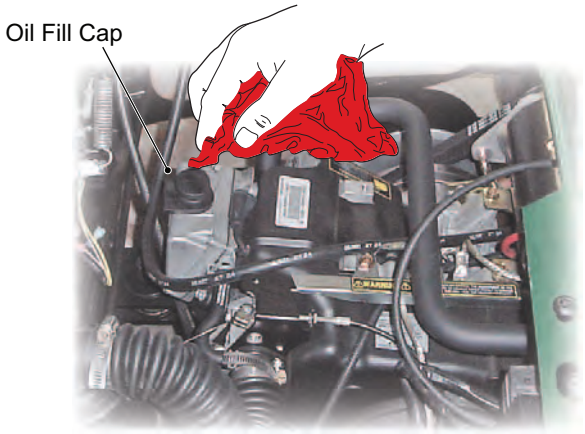

Fig. 4 Cleaning Top of Engine

⚠ WARNING

Be careful of hot oil when drained. It may be hot enough to burn you severely

Place the oil drain pan under the oil drain plug (1) found at the rear of the engine base. Remove the drain plug (1), allow the oil to drain into the drain pan.

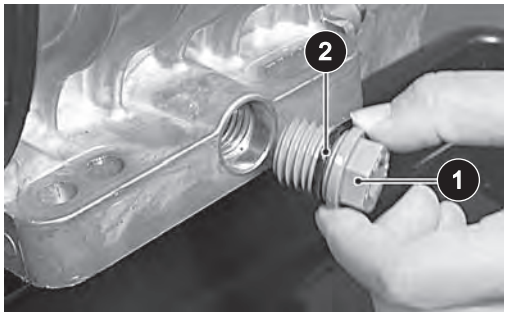

Fig. 5 Oil Drain Plug

Before installing the drain plug clean the area around the drain plug mount with a lint free cloth and inspect the drain plug (1) for damage; replace if necessary (Ref. Fig. 5). If the 'O' ring (2) on the drain plug is damaged replace it with a new one and tighten to the specified torque.

ITEM	TORQUE SPECIFICATION
1	61 in. lbs (7 Nm)

At the first oil change, **small** metal chips and lint may be found. This is normal, resulting from the break-in period. Inspect the filter at every oil change. The presence of large metal chips could indicate possible damage to the engine.

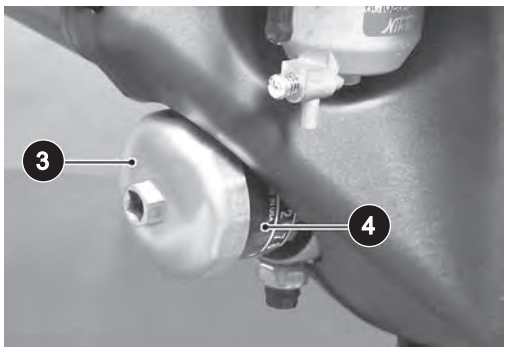

Fig. 6 Remove Oil Filter

Read all of Section B and this section before attempting any procedure. Pay particular attention to Notices, Cautions, Warnings and Dangers.

Clean the area around filter. Place the oil drain pan under the filter area. Using a filter wrench, strap wrench or other suitable filter wrench (3), remove the filter (4) from the engine and allow the oil to drain into the oil drain pan (Ref. Fig. 6). The 'O' ring (5) may remain on engine (6) or filter (7) (Ref. Fig. 7).

Inspect the filter to make sure the 'O' ring is not left on the engine surface (6), if the 'O' ring has remained on the engine surface remove it and discard with the filter.

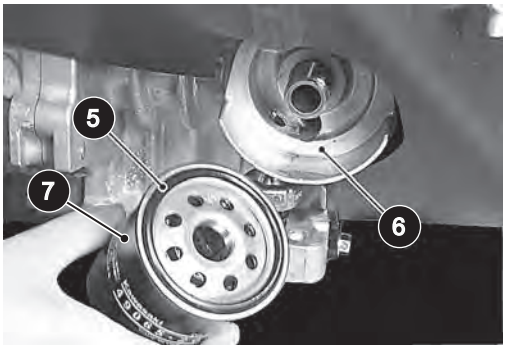

Fig. 7 Inspect Oil Filter

Inspect the new oil filter for any defects, apply engine oil to the 'O' ring seal and install the new oil filter onto the engine until the seal contacts mounting surface of the engine. Then turn the filter 2/3 to 3/4 rotation by hand. Pour in the specified type and amount of oil.

Oil capacity is 1.4 quarts (1.3 liters). Add slightly less than 1.4 quarts (1.3 liters) to allow for possible residual oil left in engine (Ref. Fig. 8). The oil must be high quality oil that meets or exceeds API SF, SG, CC standards (Ref. Fig. 3). Check oil level on dipstick. Oil should be slightly below 'H' to allow for expansion. If necessary, continue to add oil slowly and allow time for oil to flow down into engine. Check oil level on dipstick. **Do NOT overfill.**

⚠ CAUTION

Do NOT overfill engine. Too much oil may cause smoking or allow oil to enter the air filter enclosure.

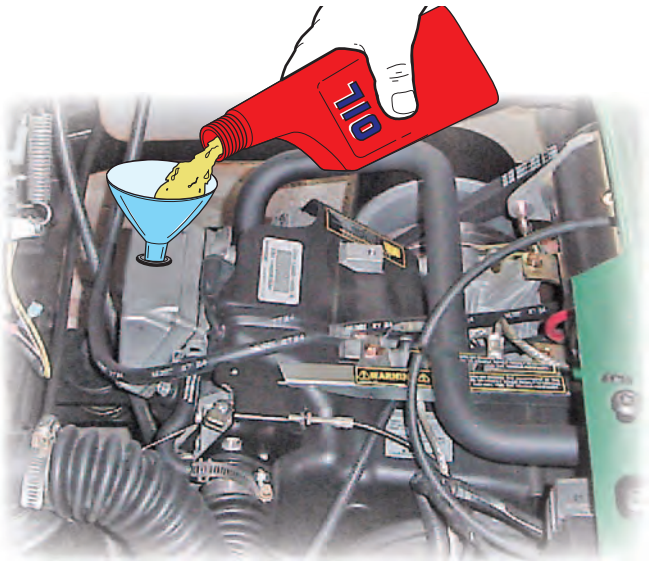

Fig. 8 Add Engine Oil

NOTICE

Both the oil dipstick and fill cap must be in place before operating the engine. Failure to install the dipstick and fill cap will result in oil being discharged into the engine compartment.

As a final check, check the oil level again with the vehicle on level ground. Like all liquids, oil increases in volume when warm. The full 'H' mark on the dipstick is calibrated for an engine at operating temperature. When the engine is cold, the oil will be below the 'H' mark. The engine can be operated safely as long as the oil is within the safe operating range as indicated on the dipstick. **Do NOT operate vehicle if oil level is below the safe area indicated on the dipstick.**

AIR FILTER INSPECTION/REPLACEMENT

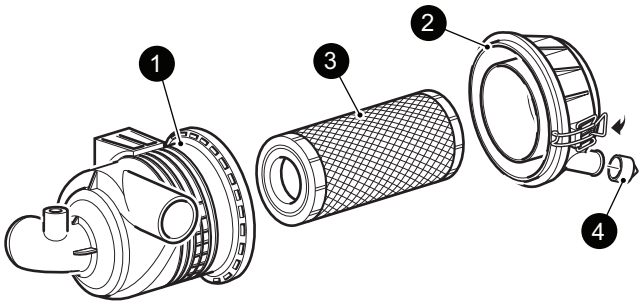

Fig. 9 Air Filter Assembly

Read all of Section B and this section before attempting any procedure. Pay particular attention to Notices, Cautions, Warnings and Dangers.

NOTICE

The air filter assembly on the vehicle is a dry unit. Do not use oil on the filter element or any part of the unit.

The air cleaner may be accessed by raising the seat. Unsnap two clips that secure the cover (2) to the canister (1) and remove the cover. Remove the air filter element (3) and clean the inside of the cover, canister and dust collector. Inspect the air filter element (3) and replace it in accordance with the Periodic Service Schedule. Install the air filter element (3) and replace the cover (2). Be sure the cover is properly seated and all clips are fastened securely.

Cleaning the Air Filter Element

CAUTION

Do NOT use compressed air to clean the air filter. Doing so will damage the filter and will damage the engine.

If the element is in acceptable condition, loose dirt may be removed by tapping the filter lightly. Do NOT use oil on the filter element or any part of the unit. Install the element in the same way it was removed, being sure that the cover clips are fastened securely.

STARTER/GENERATOR BELT TENSION

Tool List	Qty.
Belt Tension Gauge	1
Wrench, 13 mm	1
Wrench, 14 mm	2
Wrench, 15 mm	1
Ratchet	1
Socket, 13 mm	1
Socket, 15 mm	1

The starter/generator belt tension should be checked after the first 15 - 20 hours and set to 75 - 80 lbs. (34 - 36 kg).

WARNING

At no time during installation of belt, should the belt tension exceed 160 lbs (73 kg).

CAUTION

At the time of installation, the belt must not be rolled over the installed edges of the starter/generator or drive clutch pulleys. Excessive stretch in belt may cause cord failure.

NOTICE

A loose belt can cause audible vibration and squeal.

Tighten a **new** starter/generator belt to 110 - 130 lbs. (50 - 59 kg) tension when a gauge is applied half way between the two pulleys (Ref. Fig. 10).

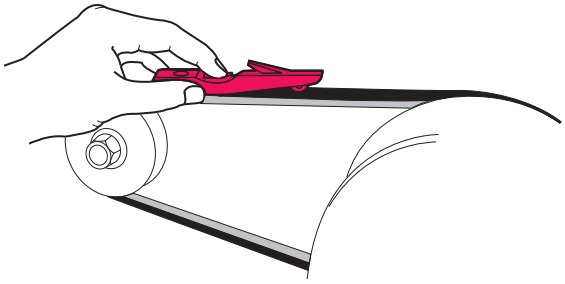

Fig. 10 Checking Belt Tension with Gauge

Although not as accurate, a **new** belt may be depressed with a finger. A maximum deflection of 3/8" (10 mm) is acceptable (Ref. Fig. 11).

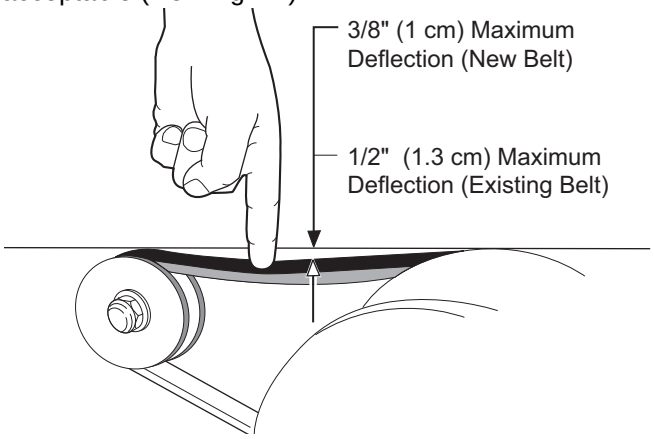

Fig. 11 Checking Belt Tension with Finger

Re-tighten an **existing** belt to 75 - 80 lbs. (34 - 36 kg) tension using the same technique. A maximum deflection of 1/2" (13 mm) is acceptable.

Adjusting the Belt

Loosen the two pivot bolts (13) and nuts (14) on the starter/generator. Using two 14 mm wrenches; hold the lower nut (11) and loosen the upper nut (12) on the starter/generator adjusting bolt.

Read all of Section B and this section before attempting any procedure. Pay particular attention to Notices, Cautions, Warnings and Dangers.

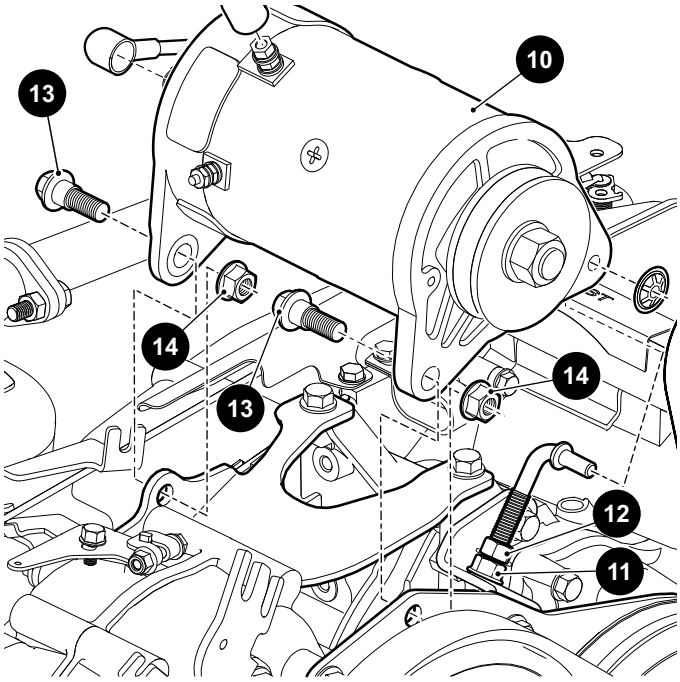

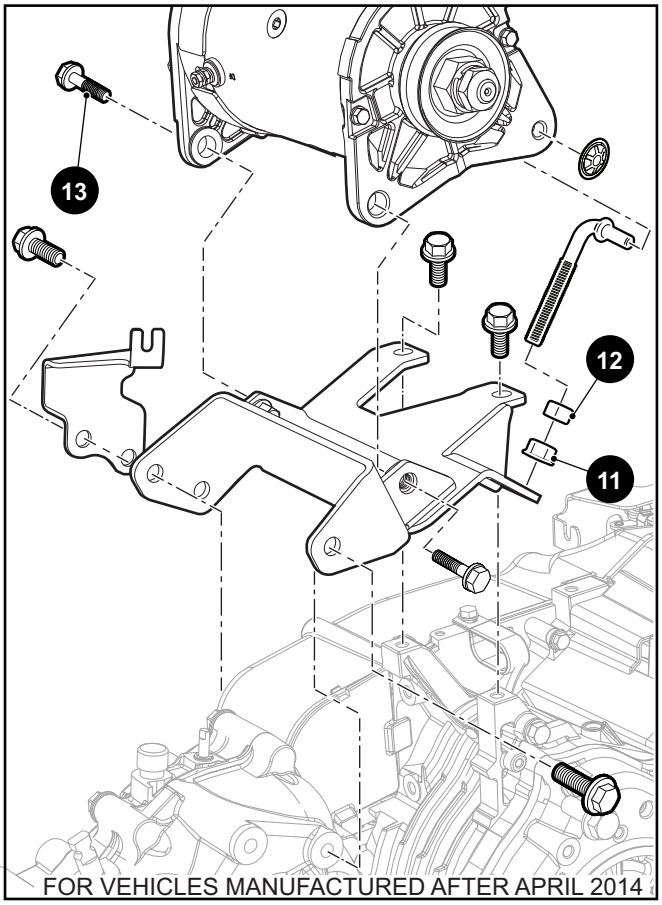

Fig. 12 Starter/Generator

Move the lower nut (11) up or down the adjustment bolt until proper belt tension is achieved. Hold the lower nut (11) in place and tighten the upper jam nut (12) against it the lower nut to the specified torque value (Ref. Fig. 13).

Fig. 13 Adjusting the Belt Tension

Using a socket and open end wrench, tighten the starter/generator pivot bolts (13) and nuts (14) to the specified torque value.

ITEM	TORQUE SPECIFICATION
12, 14	30 - 35 ft. lbs. (40 - 48 Nm)

STARTER/GENERATOR REPLACEMENT *(Ref. Fig. 12)*

Tool List	Qty.
Wrench, 8 mm	1
Wrench, 10 mm	1
Wrench, 13 mm	1
Wrench, 14 mm	2
Wrench, 15 mm	1
Ratchet	1
Socket, 13 mm	1
Socket, 15 mm	1
Torque wrench, ft. lbs.	1

WARNING

To prevent possibility of personal injury, disconnect negative (-) battery cable before beginning starter/generator removal.

Remove the wiring from the starter/generator. Loosen the jam nut (11) and the adjusting nut (12) securing the starter/generator adjuster until the starter/generator belt

Read all of Section B and this section before attempting any procedure. Pay particular attention to Notices, Cautions, Warnings and Dangers.

can be removed from the drive clutch. Remove the starter/generator pivot bolts (13) and lift starter/generator from the vehicle.

Install the starter/generator pivot bolts (13) and hardware loosely in place and install the belt. Tighten a new starter/generator belt per 'Starter/Generator Belt Tension' earlier in this section.

Tighten jam nut (12) and the pivot bolts (13) and nuts (14) to the specified torque shown in the torque table earlier in this section.

Install the wiring and tighten the terminals firmly into place. Reconnect the battery.

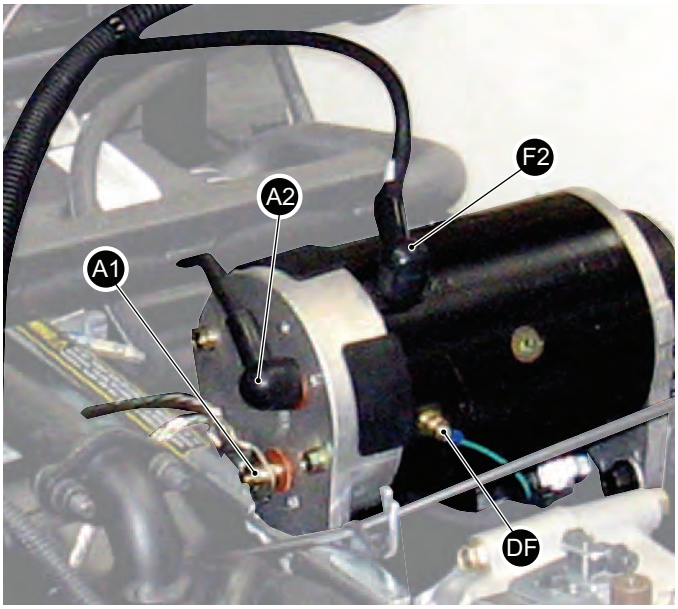

Fig. 14 Starter/Generator Wire Connections

FROM	TO
A1	Ground
A2	Terminal F1 on Starter/Generator
F1	Terminal A2 on Starter/Generator
F2	Terminal A on Solenoid
DF	Green wire to Voltage Regulator

Table. 15 Starter/Generator Wiring

COOLING SYSTEM CLEANING

At least once a year, or more often under adverse conditions the cooling system should be cleaned. Cleaning will assure an adequate supply of air to the cooling fins.

Compressed air may be used for routine cooling system maintenance (Ref. Fig. 16).

Operation in wet or damp weather or overly fresh cut grass may result in a variety of debris accumulating and adhering to the internal shroud and fins of the cooling system.

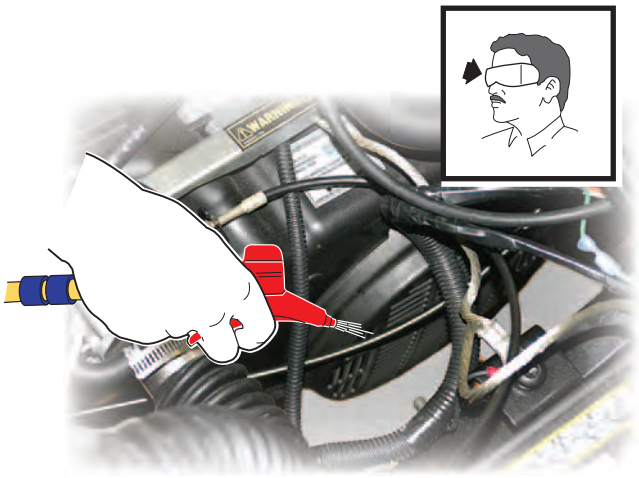

Fig. 16 Cleaning Cooling System with Air

SPARK PLUG

Tool List **Qty.**

Spark Plug Socket,13/16" 1
Feeler Gauge, wire type 1
Ratchet & Extension 1
Torque Wrench, ft. lbs 1

This engine uses Spark Plug NGK BPR2ES with a gap of .028" - .031" (.70 - .80 mm). Using a 13/16" spark plug socket or wrench, remove the spark plug at 125 hours or semi-annually and clean and re-gap. The spark plug should be properly gapped (Ref. Fig. 17) and replaced in the cylinder head, tighten to the specified torque.

ITEM	TORQUE SPECIFICATION
Spark Plug	16 ft. lbs. (22 Nm)

Read all of Section B and this section before attempting any procedure. Pay particular attention to Notices, Cautions, Warnings and Dangers.

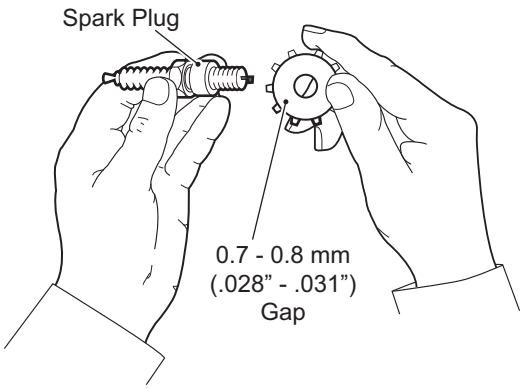

Fig. 17 Gapping the Spark Plug

Fouled spark plugs are indicated by a wet, black appearance. This could be caused by a dirty air filter element or other restrictions in the air intake system. Incorrectly adjusted valves, spark plug wires which are in poor condition or poor quality fuel could also contribute to the problem.

⚠ CAUTION

Use care not to over-tighten the plug. Over-tightening can cause damage to the aluminum cylinder head threads.

FOUR CYCLE ENGINE

Engine Specifications

Engine Model	FJ400-D
Type	Four Cycle, Overhead Valve
Number Of Cylinders	1
Displacement	401 cc
Rated Horsepower	13 hp
Spark Plug Type	NGK BPR2ES
Spark Plug Gap	.028" - .031" (.70 - .80 mm)
Cooling	Forced Air Cooled
Oil Filter	Cartridge Type Full Flow Filter
Oil Pump	Positive Displacement Pump

Engine Description

The engine is an air cooled, 4-stroke, overhead valve, single cylinder gasoline engine. It incorporates a pressure fed lubrication positive displacement oil pump with a cartridge type full flow oil filter and a counter rotating balance shaft.

CYLINDER HEAD

Compression Measurement

Tool List	Qty.
Ratchet	1
Spark Plug Socket	1
Extension 6"	1
Compression Gauge & Adapter (20 kgf/cm^2)	1

Before measuring compression, do the following:

- Be sure the battery is fully charged.
- Thoroughly warm up the engine so that engine oil between the piston and cylinder wall will help seal compression as it does during normal running.
- Stop the engine.

Disconnect the spark plug cap (3) and remove the spark plug (4) keeping the engine throttle and the choke valve fully open.

Attach the compression gauge (1) to the adapter (2) and insert firmly into the plug hole.

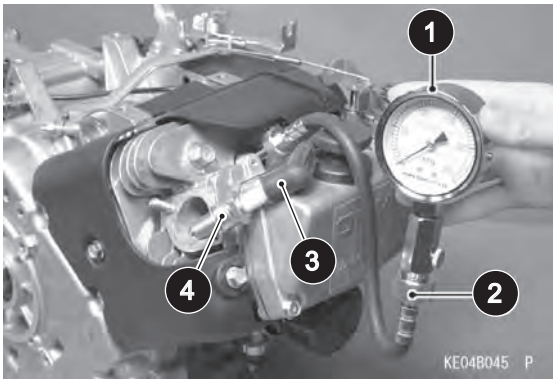

Fig. 18 Compression Gauge

Place the spark plug cap (3) on the removed spark plug (4) and ground the spark plug to the engine.

⚠ WARNING

To prevent possibility of personal injury or fire, do not ground the spark plug in proximity to the plug hole. Keep the plug as far away as possible from the plug hole. Fuel drawn into the cylinder will be expelled through the spark plug opening and could be ignited by the ignition system or another source, resulting in a fire

Using the starter motor, turn the engine over with the throttle fully open until the compression gauge stops rising.

Read all of Section B and this section before attempting any procedure. Pay particular attention to Notices, Cautions, Warnings and Dangers.

Cylinder Compression should be between 9 - 11 kgf/cm^2 (128-156 psi)

If the compression is higher than 9 kgf/cm^2 (128 psi) the piston rings, cylinder and valves are probably in good condition.

If the compression is over 11 kgf/cm^2 (156 psi), check the following:

1. Carbon build-up on the piston crown and cylinder head - clean off any carbon on the piston crown and cylinder head
2. Cylinder head gasket - use only the proper gasket. The use of a gasket of incorrect thickness will change the compression.
3. Valve guides and piston rings - rapid carbon accumulation in the combustion chamber may be caused by worn valve guides and/or worn piston oil rings. This may be indicated by white exhaust smoke.

If cylinder compression is lower than 9 kgf/cm^2 (128 psi), check the following:

1. Gas leakage around the cylinder head - replace the damaged head gasket and check the cylinder head for warp.
2. Condition of the valve seating.
3. Valve clearance.
4. Piston/cylinder wear, piston seizure.
5. Piston ring, piston ring groove.

Rocker Cover Removal

Tool List	Qty.
Ratchet	1
Extension 6"	1
Socket, 10 mm	1

1. Remove the four bolts (5) securing the rocker cover.
2. Remove the rocker cover (2) and the gasket.

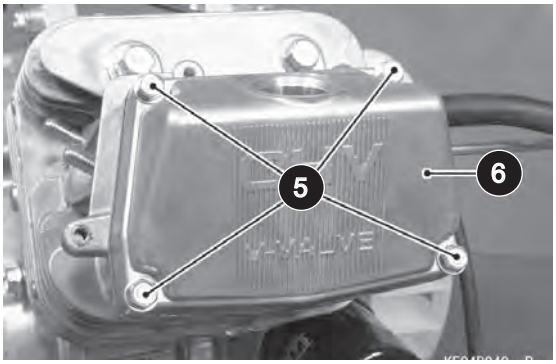

Fig. 19 Rocker Cover

Valve Clearance Inspection

Tool List	Qty.
Allen Bit, 3 mm	1
Ratchet	1
Extension 6"	1
Feeler Gauge	1
Wrench, 14 mm	1
Torque Wrench, in. lbs	1

NOTICE

Valve clearance must be checked when the engine is cold (at room temperature).

With the rocker cover removed, Place the piston at TDC of the compression stroke turning the crankshaft in its rotational direction.

Then check the valve clearance with a feeler gauge (7), measure the valve clearance between the rocker arm (8) and the valve stem end.

Valve Clearance (when cold): Inlet, Exhaust 0.10 - 0.15 mm (0.004 - 0.006 in.)

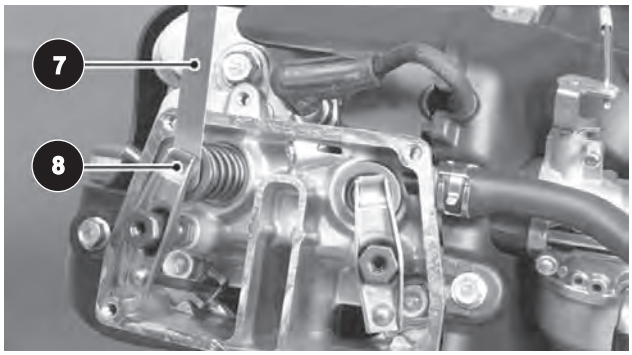

Fig. 20 Measure Valve Clearance

If the valve clearance is incorrect, adjust it.

Valve Clearance Adjustment

Turn the crankshaft to the proper direction until the piston is at TDC of the compression stroke.

Read all of Section B and this section before attempting any procedure. Pay particular attention to Notices, Cautions, Warnings and Dangers.

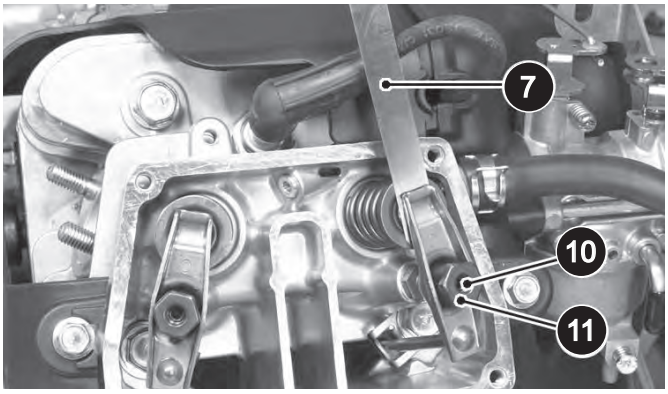

Fig. 21 Valve Clearance Adjustment

Valve Clearance (when cold): Inlet, Exhaust 0.10 - 0.15 mm (0.004 - 0.006 in.)

Loosen the lock screw (10) using the 3 mm Allen bit and the adjusting nut (11). Insert the feeler gauge (7) between the rocker arm and the valve stem end and move the adjusting nut (11) until the feeler gauge begins to bind between the rocker arm and the valve stem end.

Hold the adjusting nut (11) in place using a wrench and tighten the lock screw (10) to the specified torque.

ITEM	TORQUE SPECIFICATION
10	61 in. lbs (6.9 Nm)

⚠ CAUTION

Do NOT overtighten.

Remeasure any clearance that was adjusted. Readjust if necessary.

Replace the Rocker Cover (6), gasket and the four bolts (5). Tighten the bolts to secure the cover in place.

ENGINE REMOVAL

Tool List	Qty.
Torque Wrench, ft. lbs	1
Socket, 10 mm	1
Socket, 12 mm	1
Socket, 14 mm	1
Socket, 1/2"	1
Socket, 5/8"	1
Impact Socket, 19 mm	1
Wrench, 8 mm	1
Wrench, 10 mm	1
Wrench, 12 mm	1
Wrench, 13 mm	1
Wrench, 14 mm	2
Wrench, 15 mm	1
Wrench, 19 mm	1
Combo Wrench, 19 mm	1
Pliers	1
Extension 6"	1
Ratchet	1
Flat Ratchet	1
Impact Tool	1
Straight Blade Screwdriver	1
Drip Pan	1

This section covers the removal and installation of the engine, for information on rebuilding the engine please see the Engine Shop Rebuild Manual for this vehicle.

NOTICE

In the following text, there are references to removing/installing bolts etc. Additional hardware (nuts, washers etc.) that are removed must always be installed in their original positions unless otherwise specified. Non specified torque specifications are as shown in the table contained in Section “A”.

This operation will remove the engine through the top of the engine compartment. The weight of the engine exceeds normal OSHA limits for one person; therefore, a second person or an engine hoist will be needed to remove the engine. If a hoist is employed, it will be necessary to remove the sun top.

1. Disconnect Battery ground wire.
2. Disconnect air hose at carburetor.
3. Jack up rear of vehicle as directed in Section B of this manual. Use jack stands for stability.
4. Remove the drive belt by rotating clutch toward rear of vehicle when the belt is slipped off the top of the clutch. Remove belt from vehicle.
5. Disconnect the ’DF’ wire from starter using 8mm wrench, lay harness out of the way
6. Remove the ground strap from the Starter/Generator using a 10 mm socket.
7. Remove the Starter/Generator (See Starter/Generator Replacement in this section).
8. Remove the two bolts between muffler and Starter/Generator bracket using a flat ratchet.
9. Remove the ground strap at the crankcase using the 10 mm socket. Route ground strap through bracket and under the throttle rod and cover.
10. Remove the bracket holding the pulse line with a 6" extension and a 10 mm socket. Remove bracket and unsnap the ignition wire from the harness.

Read all of Section B and this section before attempting any procedure. Pay particular attention to Notices, Cautions, Warnings and Dangers.

11. Disconnect the pulse line from the fuel pump using pliers.
12. Disconnect the fuel line from the carburetor inlet, use drip pan to catch any fuel leakage.
13. Remove throttle rod cover using a 6" extension and a 12 mm socket. Remove the throttle rod at the carburetor butterfly using a flat blade screwdriver to pop the retaining tab from the throttle rod and lift throttle rod out of hole. Remove throttle rod at rear by rotating 45 degrees from the bracket and lift through the bracket slot and remove rod from vehicle.
14. Loosen nuts on the choke cable using a 10 mm wrench. Close choke butterfly and remove cable from slot.
15. Remove both bolts from starter/generator bracket using a 15 mm wrench. Move throttle bracket away from engine.
16. Remove muffler bolts from muffler stack using a 10 mm and a 13 mm wrench.
17. Remove the passenger side hub cap if equipped and using a 3/4" lug wrench, remove the wheel and tire assembly.
18. Set Park Brake and place direction selector in Forward to place tension on the clutches.
19. Access the driven clutch from the passenger side of the vehicle and using a 19mm combo wrench, remove the bolt from the driven clutch.
20. Install the clutch puller bolt in clockwise position until it bottoms out.
21. Using a impact tool and an impact socket on the clutch puller bolt, remove the clutch then remove the clutch puller bolt.
22. To remove the drive clutch, use a 19mm impact socket with an impact tool remove the 19 mm bolt from the center of the drive clutch.
23. Raise the powertrain with the floor jack so that the clutch puller bolt clears the spring hanger. Remove the front eyebolt from the spring hanger using a 15 mm socket and a 15 mm wrench. Install the clutch puller bolt in a clockwise position and using the impact tool remove the drive clutch from the shaft. Remove the clutch puller bolt.
24. Remove the four 15 mm bolts from the engine support bracket connecting the engine to the differential and the engine to the inner frame.
25. Remove the 15 mm bolts from the bottom of the skid plate. Access the forward two nuts through the oil drain access hole.

Controls and Wiring

Unplug the wiring harness from the engine and cut the wire tie securing the accelerator cable to the engine.

Removing the Engine from the Vehicle

NOTICE

Place suitable blocks under the engine frame for support. Although the blocks are not required for engine removal, they will help maintain the alignment of the frames and simplify engine installation.

NOTICE

It is not necessary to remove the muffler as part of the engine removal.

Engine Installation

⚠ CAUTION

When installing the fuel and pulse lines, pay particular attention to assure that the lines are not confused.

It is important to follow the assembly sequence recommended for mounting hardware.

With the assistance of a hoist or another person, lower the engine into position over the engine support castings.

Install one rear horizontal and one front bottom engine bolt through the casting and engine and lightly snug in place.

Install the remaining horizontal engine bolts and finger tighten. Remove the front bottom bolt and reinstall the skid plate finger tight.

Tighten the bottom and horizontal mounting bolts to 45 ft. lbs. (60 Nm) torque.

The remaining installation is in the reverse order of disassembly using standard torque specifications.

DRIVE CLUTCH REMOVAL

⚠ WARNING

To prevent the possibility of personal injury, use only impact sockets when using an impact wrench.

Insert a clutch puller bolt (p/n 608429) into the clutch and hand tighten for several turns. Remove the clutch by

Read all of Section B and this section before attempting any procedure. Pay particular attention to Notices, Cautions, Warnings and Dangers.

driving it off with the impact wrench and the clutch puller bolt.

NOTICE

In some extreme cases, the clutch will be resistant to removal In stubborn cases the clutch removal tool should be removed and the cavity filled with grease. Install the clutch puller and use the impact wrench to drive off the clutch. The combination of hydraulic pressure (grease) and the impact wrench will remove the most stubborn clutch. To prevent damage to the clutch, be sure to remove all grease from the body of the clutch since grease penetrating the seal may cause premature clutch failure.

It is not necessary to remove the engine to remove the clutch. Refer to the **CONTINUOUSLY VARIABLE TRANSMISSION (CVT)** section for removal and installation.

Read all of Section B and this section before attempting any procedure. Pay particular attention to Notices, Cautions, Warnings and Dangers.

NOTES:

TABLE OF CONTENTS FOR SECTION 'H'

SECTION TITLE **PAGE NO.**

GENERAL ..... **H - 1**

CARBURETOR OPERATION ..... **H - 2**
Float System ..... H - 2
Pilot Jet System ..... H - 2
Main Jet System ..... H - 2
Carburetor Service ..... H - 2
Choke System ..... H - 2
Choke Operation ..... H - 2

FUEL SYSTEM COMPONENT SERVICE AND REPLACEMENT ..... **H - 3**
Choke Cable and Housing Removal ..... H - 3
Choke Cable and Housing Installation ..... H - 3
Carburetor Removal ..... H - 4
Carburetor Disassembly ..... H - 4
Float Level Alignment ..... H - 5
Carburetor Installation ..... H - 5

FUEL PUMP ..... **H - 5**
Fuel Pump Replacement ..... H - 6

FUEL LINES AND FILTER ..... **H - 6**

FUEL TANK REMOVAL ..... **H - 7**

CARB CANISTER ..... **H - 7**

LIST OF ILLUSTRATIONS

Fig. 1 Fuel System ..... H - 1
Fig. 2 Fuel Tank ..... H - 2
Fig. 3 Choke Cable Attachment ..... H - 3
Fig. 4 Choke Cable and Housing ..... H - 3
Fig. 5 Carburetor Operation ..... H - 4
Fig. 6 Carburetor Disassembly ..... H - 5
Fig. 7 Float Adjustment ..... H - 5
Fig. 8 Fuel Pump ..... H - 6
Fig. 9 Fuel Lines and Filter ..... H - 6
Fig. 10 Fuel Tank Removal ..... H - 7
Fig. 11 CARB Canister ..... H - 7
Fig. 12 CARB Hoses ..... H - 8
Fig. 13 REFRESHER 2000 Fuel Tank ..... H - 8

Read all of Section B and this section before attempting any procedure. Pay particular attention to Notices, Cautions, Warnings and Dangers

NOTES:

Read all of Section B and this section before attempting any procedure. Pay particular attention to Notices, Cautions, Warnings and Dangers.

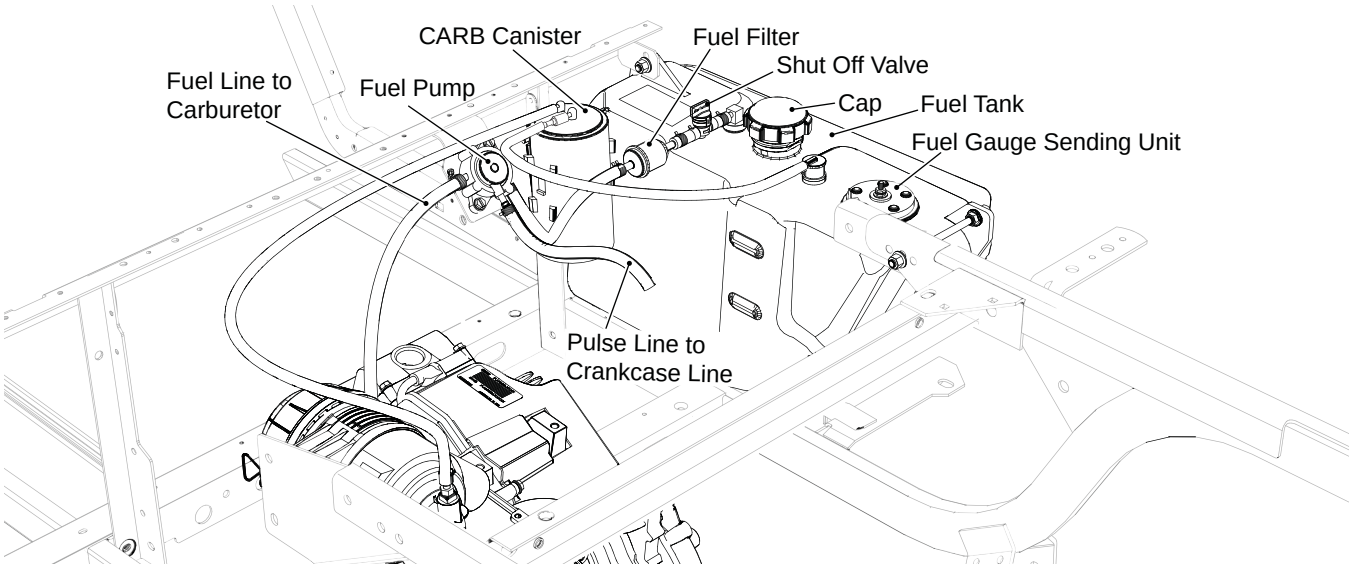

Fig. 1 Fuel System

GENERAL

Illustrations in this section may include components used on vehicles that comply with requirements of the California Air Resource board (CARB).

The position of the air filter may change depending upon the vehicle model. The air filter components are the same regardless of the position of the air filter.

NOTICE

In the following text, there are references to removing/installing bolts etc. Additional hardware (nuts, washers etc.) that are removed must always be installed in their original positions unless otherwise specified. Non-specified torque specifications are as shown in the table contained in Section A.

The fuel system consists of a fuel tank, fuel lines, fuel filter, fuel pump and carburetor; on CARB vehicles it also includes the CARB Canister (Ref. Fig. 1).

⚠ WARNING

To prevent serious injury or death resulting from a possible explosion, do not smoke near the fuel tank or refuel near open flame or electrical items which could produce a spark.

Always wear safety glasses while refueling to prevent possible eye injury from gasoline or gasoline vapor.

When refueling, inspect the fuel cap for leaks or breaks that could result in fuel spillage.

Do not handle fuel in an area that is not adequately ventilated. Do not permit anyone to smoke in an area where vehicles are being fueled.

⚠ CAUTION

Do not over fill the fuel tank. Allow adequate space for the expansion of gasoline. Leave at least 1" (2.5 cm) space below bottom of filler neck.

The fuel tank is located under the seat, on the passenger side of the vehicle (Ref. Fig. 2). Fill tank with fresh, clean, automotive grade, unleaded, 87 octane (minimum) gasoline. High altitude or heavy use/load applications may benefit from higher octane gasoline.

Read all of Section B and this section before attempting any procedure. Pay particular attention to Notices, Cautions, Warnings and Dangers.

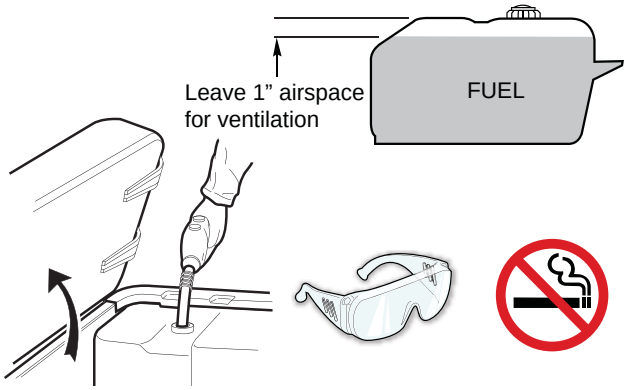

Fig. 2 Fuel Tank

CARBURETOR OPERATION

The carburetor consists of four different systems:

- Float
- Pilot jet
- Main jet
- Choke

Float System

The float chamber is located on the underside of the carburetor and the correct fuel level is maintained by means of the float and needle valve.

As the fuel flows from the fuel pump it must pass through the needle valve and into the float chamber. As the fuel enters the float chamber, the float starts to rise against the needle valve. When the buoyancy of the float exceeds the fuel pressure on the needle valve, the float closes the needle valve. The float is not adjustable to maintain the correct fuel level within the float chamber. As fuel is consumed from the float chamber, the float drops which allows the needle valve to admit additional fuel.

Pilot Jet System

The pilot jet system function is to deliver fuel to the engine during low speed operation. The fuel flow is determined by the pilot jet size and the setting of the pilot screw.

Main Jet System

The main jet system function is to deliver fuel to the engine during acceleration and heavy load conditions. Fuel flow is determined by the main jet size. Air is mixed with fuel that passes through the bleed opening in the main nozzle. This mixture passes into the carburetor venturi as atomized air/fuel and is mixed with intake air and delivered to the engine.

Carburetor Service

Be sure that the ignition system is functioning correctly before determining that servicing the carburetor is required. Refer to ELECTRICAL section for ignition system information.

Choke System

The choke functions to make initial starting of the engine easier in cold weather conditions. The choke plate restricts the air flow into the carburetor which enriches the air/fuel ratio.

Choke Operation *(Ref. Fig. 3)*

Pull the choke knob (10) out to operate the choke (Ref. Fig. 3). Check that the cable operates smoothly and that the cable returns when the knob is released. The motion should be smooth throughout the entire operating range. If there is any binding or sharp bends, the choke cable assembly must be replaced.

NOTICE

Do not attempt to lubricate the choke cable. Lubricant tends to retain dirt on the moving parts which will cause premature deterioration of the cable.

Read all of Section B and this section before attempting any procedure. Pay particular attention to Notices, Cautions, Warnings and Dangers.

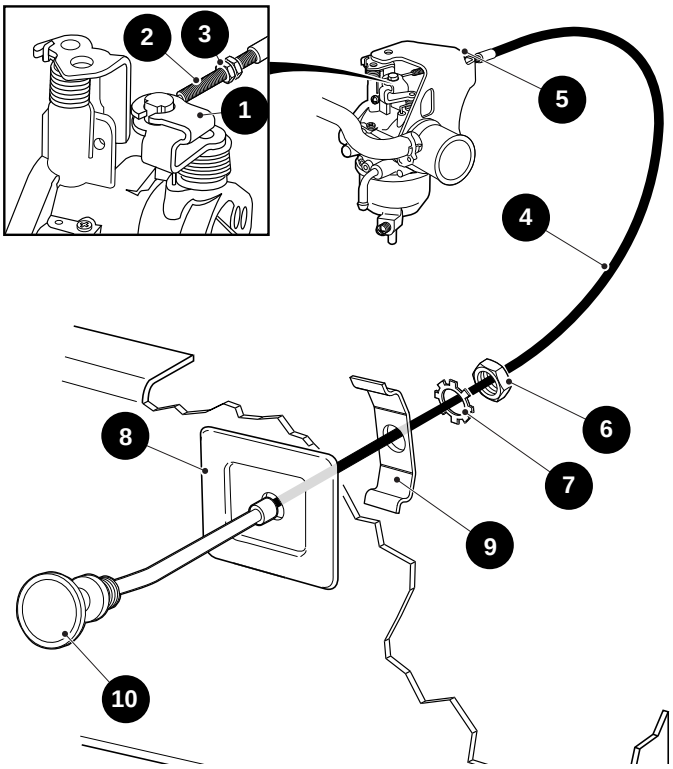

Fig. 3 Choke Cable Attachment

WARNING

To prevent an ignition spark which could ignite gasoline from the fuel system and result in personal injury, the negative battery cable must be removed from battery (see Section 'B').

FUEL SYSTEM COMPONENT SERVICE AND REPLACEMENT

Choke Cable and Housing Removal *(Ref. Fig. 3) & (Ref. Fig. 4)*

Tool List	Qty.
Open End Wrench, 10 mm	2
Open End Wrench, 7/8"	1

Loosen the nuts (3) that secure the choke cable to the choke cable bracket (5). Lift the choke cable and housing (2) clear of the bracket and position it so that the bullet end of the choke cable can be removed from the carburetor choke plate (1).

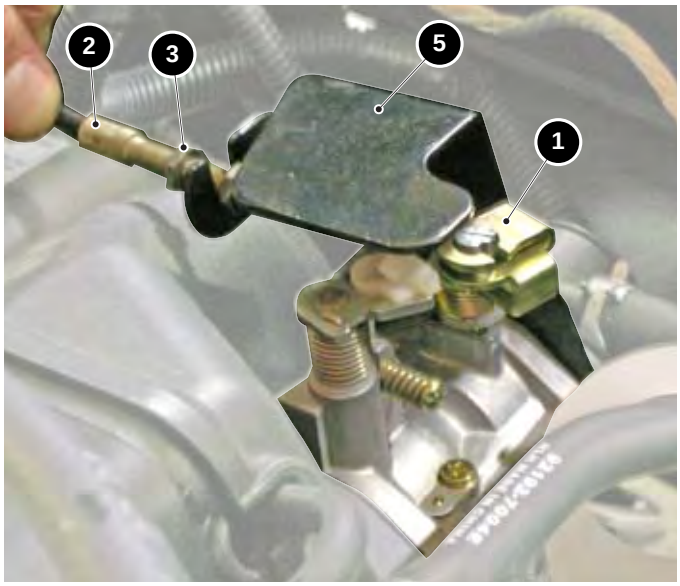

Fig. 4 Choke Cable and Housing

At the seat panel, remove the nut (6) and lock washer (7) securing the outer cable to the bezel (8). Slide the nut, lock washer off the end of the choke cable and pull the choke cable out through the seat wrap. Remove the choke cable bezel (8) from the seat panel.

Choke Cable and Housing Installation

NOTICE

In the following text, there are references to removing/installing bolts etc. Additional hardware (nuts, washers etc.) that are removed must always be installed in their original positions unless otherwise specified. Non-specified torque specifications are as shown in the table contained in Section 'A'.

Feed the choke cable assembly (8) through the hole in the bezel (8) (Ref. Fig. 3). Insert the cable and bezel into the seat panel and through the air cleaner intake and install the lock washer (7) and nut (6) finger tight. Slide the threaded portion of the housing through the carburetor mounted bracket (5) and attach the nuts (3) to the choke cable housing finger tight. Insert the choke cable bullet into the choke arm (1) hole and release. Make sure that the choke and choke knob are both in the open position.

Adjust the position of the curved portion of the cable housing to ensure that the cable does not contact other moving parts. Check the cable to be sure that there are no sharp bends or kinks in the cable before firmly tightening the nuts at both ends of the cable.

Read all of Section B and this section before attempting any procedure. Pay particular attention to Notices, Cautions, Warnings and Dangers.

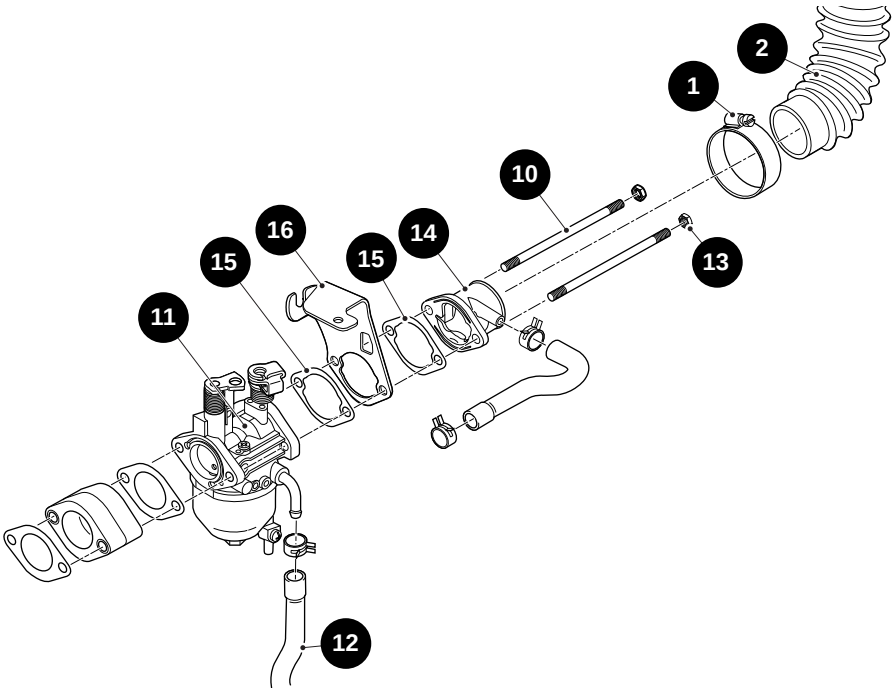

Fig. 5 Carburetor Operation

Carburetor Removal *(Ref. Fig. 5)*

Tool List	Qty.
Socket, 10 mm	1
Ratchet	1
Extension, 3"	1
Parallel Jaw Pliers	1
Straight Blade Screwdriver	1
Phillips Screwdriver	1
Torque Wrench, in. lbs.	1

Loosen the hose clamps (1) from each end of the air intake hose (2). Remove hose (Ref. Fig. 5).

Disconnect the fuel line (12) from the carburetor and plug the fuel line. Disconnect the solid linkage from the carburetor throttle lever. See SPEED CONTROL section. Remove the choke cable from the choke lever swivel.

Remove the nuts (13), PCV valve (14), gaskets (15) and choke bracket (16) and slide the carburetor (11) from the engine studs (10).

Carburetor Disassembly *(Ref. Fig. 6)*

Tool List	Qty.
Socket, 12 mm	1
Ratchet	1
Pliers	1
Straight blade screwdriver, (narrow)	1

NOTICE

Before disassembling the carburetor, drain the fuel bowl and clean the outside of the carburetor thoroughly with solvent. All work should be done on a clean surface. Care should be taken when disassembling the carburetor or removing the jets. Most carburetor malfunctions are due to wear or clogging of internal passages with foreign material. **Do NOT** bend the float pin during removal. See 'Carburetor Troubleshooting' elsewhere in this section.

Remove the float bowl (1) by removing the retaining screw (2) and washer (3) (Ref. Fig. 7).

Inspect the bowl gasket (4) for nicks or cuts. Carefully press out the float pin (5), remove the float (6) and the inlet valve (7). Inspect the inlet valve for wear at its tip.

Remove the main jet (8).

Wash all parts in solvent and blow through all passages with compressed air. Replace all gaskets and any parts which show significant wear or damage. Drain screw (9) and spring (10) can be used to drain the fuel from the bowl without removing the bowl.

Read all of Section B and this section before attempting any procedure. Pay particular attention to Notices, Cautions, Warnings and Dangers.

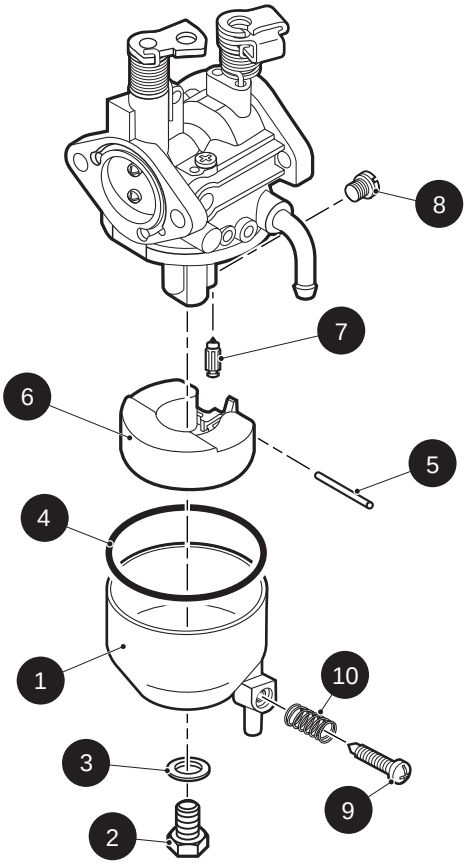

Fig. 6 Carburetor Disassembly

Float Level Alignment *(Ref. Fig. 7)*

NOTICE

The float level cannot be adjusted but should be inspected for proper alignment (Ref. Fig. 7).

Turn carburetor upside down. Remove the bowl. With the carburetor inverted, the 'B' side top edge of a properly adjusted float will be slightly above parallel to the bowl gasket surface and both sides of the float will be level with each other (Ref. Fig. 7). If the sides of the float are not parallel or if the 'B' side of the float is not slightly above parallel with the bowl gasket surface then the float should be replaced. Reinstall the bowl, washer and the screw. Check for fuel leaks.

Check for free movement of the choke shaft before installing the carburetor. Lubricate the bushings with WD-40® oil or equivalent.

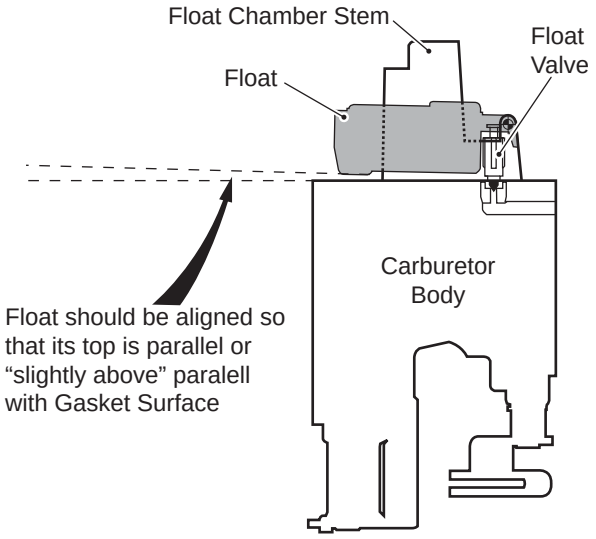

Fig. 7 Float Adjustment

Carburetor Installation

WARNING

To prevent possible injury from explosion or fire, check for clogged or kinked hoses. Clogged or kinked carburetor hoses are not only detrimental to the proper operation and performance of the vehicle, but can also be a safety hazard in the case of fuel leaking on a hot engine Air Cleaner

CAUTION

Do not let the carburetor vent hose become clogged or kinked. Engine heat will cause the fuel in the carburetor bowl to expand and may result in fuel being expelled from the carburetor if unable to vent through the vent tube.

Replace carburetor in reverse order of disassembly. Use a new gasket to ensure sealing of carburetor. Tighten hardware to 50 - 70 in. lbs. (6 - 8 Nm) torque (Ref. Fig. 5).

FUEL PUMP

The fuel pump is mounted on a bracket attached to the seat support near the gasoline tank on the passenger side and is operated by crankcase pressure impulses from the engine. As the piston moves up in the cylinder,

Read all of Section B and this section before attempting any procedure. Pay particular attention to Notices, Cautions, Warnings and Dangers.

a negative pressure moves the diaphragm within the fuel pump (1) (Ref. Fig. 8). This movement draws fuel from the fuel tank into the fuel pump chamber. This action also closes the outlet valve which prevents fuel back flowing from the carburetor.

As the piston moves down in the cylinder, a positive pressure is formed in the crankcase which causes the diaphragm to move in the opposite direction (away from the engine). This action forces the inlet valve to close and the outlet valve to open and supply fuel to the carburetor float bowl.

Fuel Pump Replacement

Tool List	Qty.
Socket, 3/8"	1
Ratchet	1
Pliers	1
Straight Blade Screwdriver	1

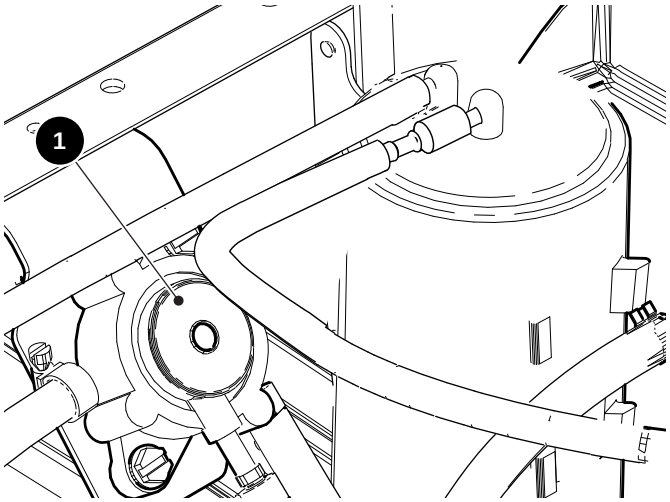

Fig. 8 Fuel Pump

CAUTION

Do not confuse the pulse and fuel lines. Attempting to operate engine with lines reversed will result in fuel entering the crankcase and diluting the oil and possible engine damage.

NOTICE

The length of the pulse hose from the fuel pump is important for efficient pump operation. If the hose is to be replaced, be sure to replace with a hose of the same length and approved material.

Observe and identify the supply and pulse hoses. Remove the hoses, plug the fuel lines and remove the fuel pump (1) by removing the two screws that secure it to the bracket located on the seat support frame near the fuel tank on the passenger side of the vehicle (Ref. Fig. 8) .

Installation is in the reverse order of disassembly. Be sure to connect the pulse line to the correct location on the pump (Ref. Fig. 8).

FUEL LINES AND FILTER

Tool List	Qty.
Pliers	1
Straight Blade Screwdriver	1

Fuel is supplied to the fuel pump and carburetor through flexible fuel hoses. An in-line filter (1) is installed in the hose between the fuel tank (2) and the fuel pump (3) (Ref. Fig. 9).

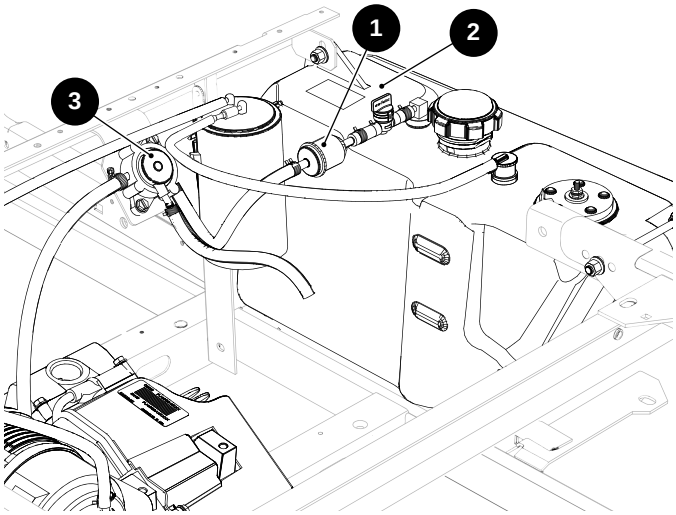

Fig. 9 Fuel Lines and Filter

Read all of Section B and this section before attempting any procedure. Pay particular attention to Notices, Cautions, Warnings and Dangers.

WARNING

To prevent possibility of personal injury, tests that involve fuel flow should be avoided if at all possible. If a test to determine fuel/vapor presence or flow is required, the ignition system must be disabled. Remove the input wire to the magneto in order to prevent an ignition spark that could ignite the fuel/vapor. Never permit smoking or an open flame in an area that contains fuel/vapor. Clean up all fuel spills immediately.

The fuel filter, tank, hoses and cap should be checked frequently for leaks, or signs that the cap vent or filter have become clogged. The filter should be replaced as required. See 'Periodic Service Schedule' in Section 'A'.

CAUTION

The filter is marked with a flow direction arrow. Be sure that the arrow points towards the fuel pump

WARNING

To prevent possibility of injury from explosion or fire, never attempt to repair a damaged or leaking fuel tank. It must be replaced.

FUEL TANK REMOVAL

Tool List	Qty.
Wrench, 5/16"	1
Socket, 5/16"	1
Ratchet	1
Drip Pan	1

While wearing eye shield, disconnect the negative battery wire with a wrapped wrench. Turn off the Fuel shut off Valve (3). Disconnect the fuel line (4) at the fuel pickup and the line to the CARB canister (5), if the vehicle is so equipped. Watch for gasoline leakage from the fuel line, always use a drip pan and dispose of spent fuel safely.

Remove the forward hex nut (6) and bolt. Remove the rear nut (7) and bolt.

Remove the tank from the engine compartment

Installation is in reverse order.

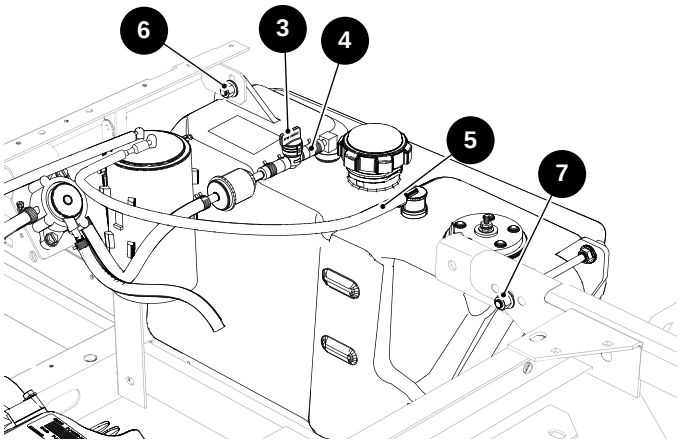

Fig. 10 Fuel Tank Removal

CARBON CANISTER *(Ref. Fig. 11)*

Tool List	Qty.
Flat Blade Screwdriver	1

To remove the CARB canister (4) pull and disconnect the EVAP hose (3). To disconnect the fuel tank hose (2), disconnect the hose (6) from the CARB canister and remove the fuel hose reducer (7) from the fuel tank hose (2). Press the tabs (5) on the mounting bracket and slide the canister upward to clear the mounting bracket.

To install a CARB canister position the canister ears above the mounting bracket and push against the bracket and downward so that the canisters ears slide into the channels on the bracket. Make sure that the canister is seated completely and the retaining tabs are clear of the canister ears then connect the hoses.

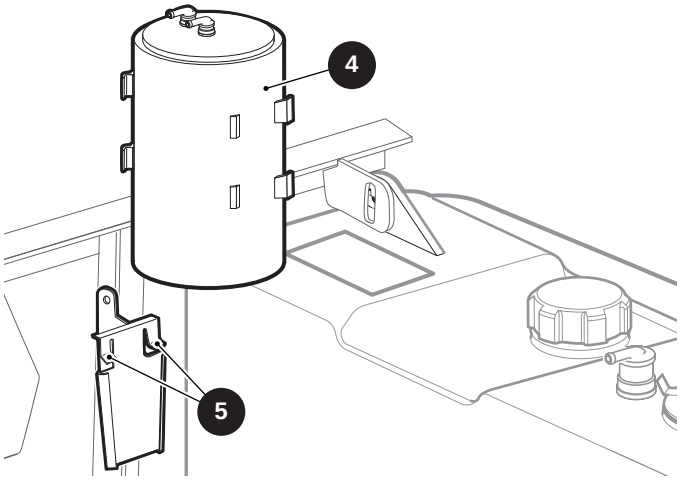

Fig. 11 CARB Canister

Read all of Section B and this section before attempting any procedure. Pay particular attention to Notices, Cautions, Warnings and Dangers.

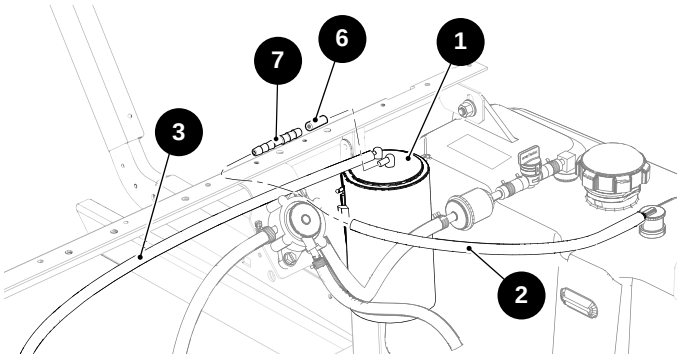

Fig. 12 CARB Hoses

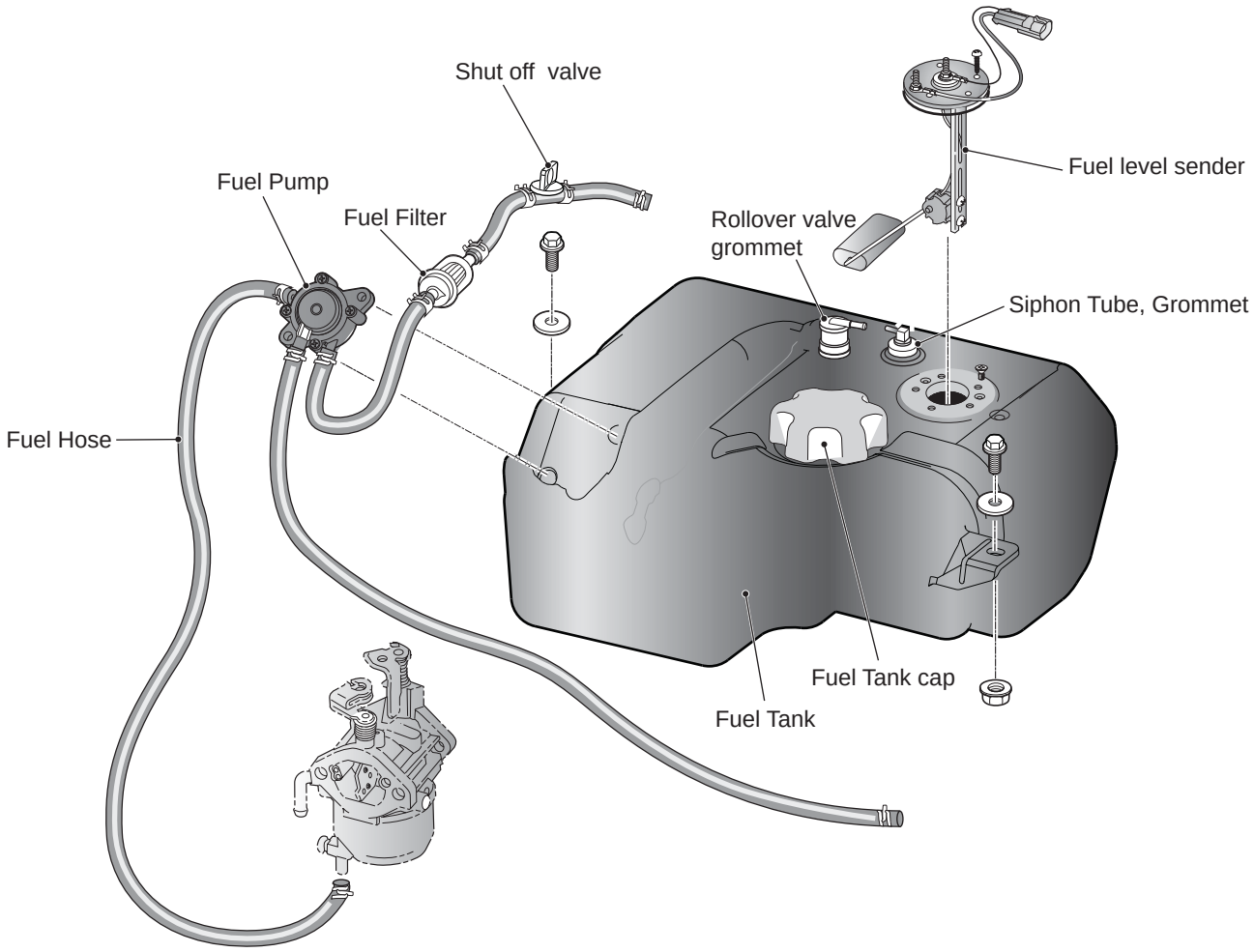

Fig. 13 REFRESHER 2000 Fuel tank

Read all of Section B and this section before attempting any procedure. Pay particular attention to Notices, Cautions, Warnings and Dangers.

NOTES:

Read all of Section B and this section before attempting any procedure. Pay particular attention to Notices, Cautions, Warnings and Dangers.

NOTES:

TABLE OF CONTENTS FOR SECTION 'J'

SECTION TITLE **PAGE NO.**

GENERAL ..... **J - 1**

CLUTCHES ..... **J - 1**
- Drive Clutch ..... J - 1
- Driven Clutch ..... J - 2
- Increased Load ..... J - 2
- Equilibrium ..... J - 2
- Removing the Drive Belt ..... J - 2
- Drive Belt Service ..... J - 2
- Drive Clutch Removal ..... J - 2
- Drive Clutch Installation ..... J - 4
- Driven Clutch Removal ..... J - 4
- Driven Clutch Repair ..... J - 4
- Driven Clutch Assembly ..... J - 4
- Driven Clutch Installation ..... J - 4

STORAGE ..... **J - 4**

LIST OF ILLUSTRATIONS

Fig. 1 Continuously Variable Transmission System (CVT) ..... J - 1
Fig. 2 Removing the Drive Belt ..... J - 2
Fig. 3 CVT Components ..... J - 3

Read all of Section B and this section before attempting any procedure. Pay particular attention to Notices, Cautions, Warnings and Dangers

NOTES:

Read all of Section B and this section before attempting any procedure. Pay particular attention to Notices, Cautions, Warnings and Dangers.

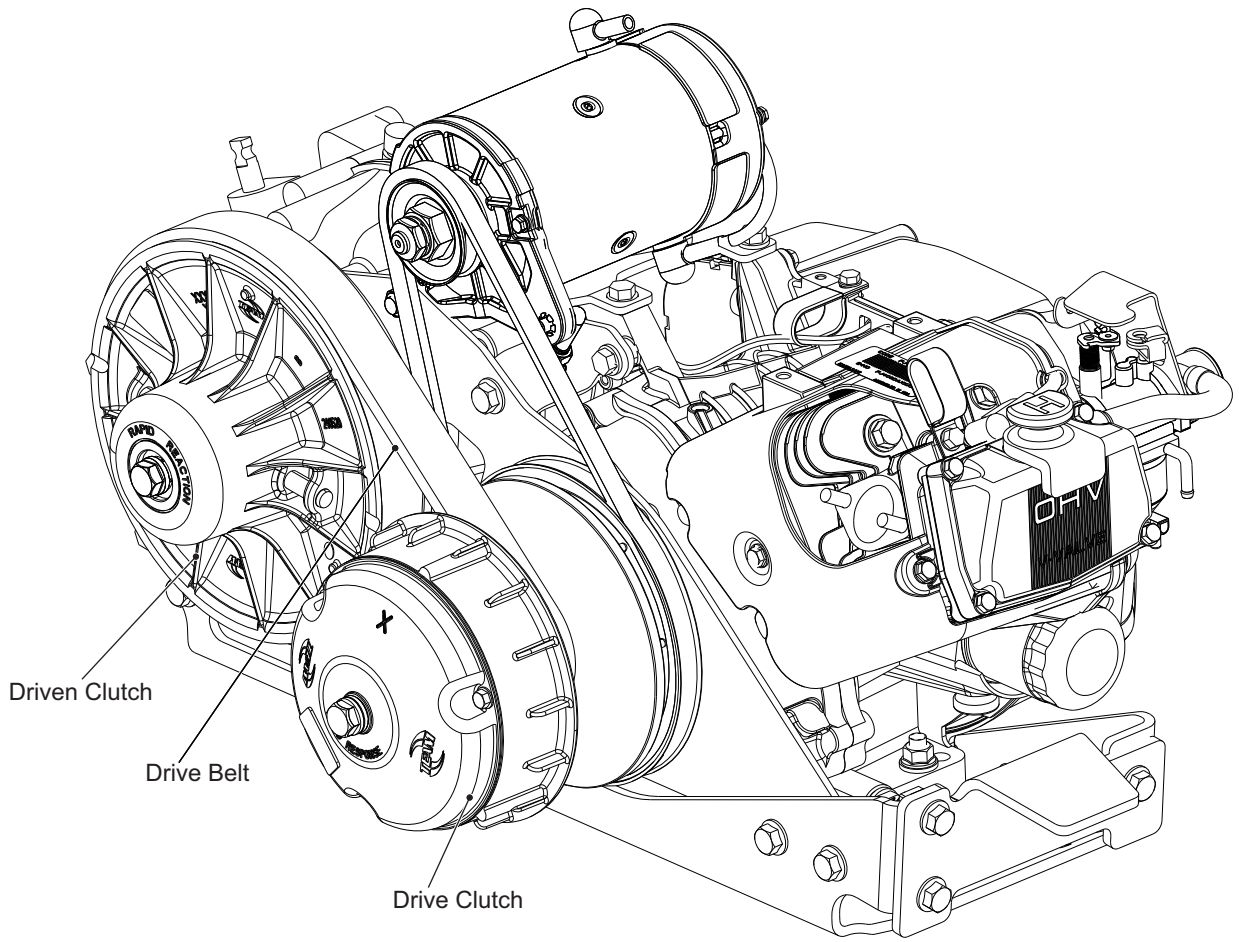

Fig. 1 Continuously Variable Transmission System (CVT)

GENERAL

Power transmission from the engine to the rear axle is by means of a continuously variable transmission (CVT). The CVT consists of two matched clutch units joined by a drive belt (Ref. Fig. 1). The engine mounted drive clutch is a centrifugal unit that responds to engine speed and the rear axle mounted driven clutch is a load sensing unit.

CLUTCHES

Drive Clutch

When the accelerator is depressed, the engine speed is increased which causes the cams (weights) within the centrifugal drive clutch to move outwards and force the moveable sheave inwards. The drive belt is engaged by the clutch sheaves and begins to rotate.

As the engine speed continues to rise, the drive clutch sheave continues to move inwards forcing the drive belt to the outer diameter of the drive clutch sheaves which increases the speed of the belt. The ratio is greatly decreased and provides maximum speed.

When the accelerator is released, the engine speed is decreased and the cams exert less pressure on the moveable sheave which is forced outwards against the cams by a compression spring. The drive belt disengages from the clutch sheave when engine speed is reduced to the point where the cams exert less force than the spring.

Read all of Section B and this section before attempting any procedure. Pay particular attention to Notices, Cautions, Warnings and Dangers.

Driven Clutch

The driven clutch sheaves are closed at rest which results in the drive belt being held at the outer diameter of the driven clutch. The driven clutch has no weights but is held closed by a torsion spring which is joined to the moveable sheave and a torque ramp (cam) that is attached to the fixed sheave. The moveable sheave slides against the cam with the three points of contact provided by low friction 'buttons'.

As the drive belt starts to rotate, the driven clutch starts to rotate. As the speed of the drive clutch increases and the belt starts to climb the sheaves, the driven clutch responds by being forced open in order to permit the belt to ride lower in the driven clutch sheaves. The sheaves overcome the pressure exerted by the torsion spring and cam.

As the driven clutch slows, the belt rides lower in the drive clutch sheaves. The driven clutch compensates by closing in response to the torsion spring and cam.

Increased Load

When the vehicle is at governed speed and starts to climb a grade or is subjected to other increased load conditions, the drive belt friction is overcome by the additional load and the belt seeks a point where it can achieve adequate friction to overcome its slippage. The belt moves outwards on the driven clutch which closes due to the torsion spring moving the moveable sheave against the torque ramps. The movement of the drive belt overcomes some of the centrifugal force exerted by the cams in the drive clutch. This forces the belt lower into the drive clutch which increases the drive ratio. This 'downshifting' applies more torque to the rear axle without an appreciable change to the engine speed since the governor opens the carburetor in direct response to the reduction in ground speed.

Equilibrium

The CVT functions because the drive and driven clutches maintain equilibrium. Clutch sets are tuned to the vehicle that they are designed to operate. Changes in vehicle weight or desired performance characteristics require that both clutches be tuned to the needs of the vehicle and remain compatible with each other.

Removing the Drive Belt

With the vehicle on level ground, remove the drive belt by pulling the belt upwards which will cause the driven clutch sheaves to open and loosen the belt tension (Ref. Fig. 2). The belt may then be rolled off the driven clutch.

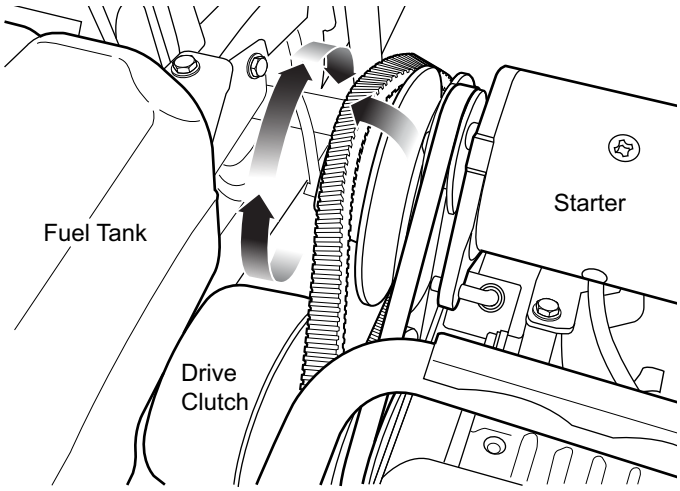

Fig. 2 Removing the Drive Belt

Drive Belt Service

The drive belt will require no service unless the vehicle has been operated in an extremely dusty or muddy location in which case it should be washed with plain water. If the belt becomes frayed or badly worn, it must be replaced.

Drive Clutch Removal *(Ref. Fig. 3)*

Tool List	Qty.
Plastic Faced Hammer	1
Clutch Puller, (p/n 608429)	1
Wrench, 18 mm	1
Socket, 18 mm	1
Impact Socket, 19 mm	1
Impact Wrench (air or electric)	1
Ratchet	1
Extension, 8"	1
Thread Locking Sealant	AR
Torque Wrench, ft. lbs.	1

⚠ WARNING

To prevent burns and other possible injuries:

Disable the electrical system before attempting to remove the drive belt to prevent the engine from inadvertently starting.

Be sure that the engine and exhaust components have cooled before attempting any service.

Do not allow fingers to become trapped between the belt and clutch sheave.

Read all of Section B and this section before attempting any procedure. Pay particular attention to Notices, Cautions, Warnings and Dangers.

Use only sockets designed for use with an impact wrench. Never use a socket intended for use with hand tools.

Remove the drive belt (1). (Refer to 'Removing The Drive Belt' procedure elsewhere in this section.) Remove the Starter/Generator belt (Refer to 'Starter/ Generator Removal' in ENGINE section.)

Using a 19mm impact socket with a impact tool and a impact universal joint, remove the 19 mm bolt (2) from the center of the drive clutch.

Raise the vehicle frame with the floor jack and allow the powertrain to drop so that the clutch puller bolt clears the spring hanger. Remove the front eyebolt from the spring hanger using a 15 mm socket and a 15 mm wrench. Install the clutch puller bolt in a clockwise position and using the impact tool and universal joint remove the drive clutch from the shaft. Remove the clutch puller bolt.

NOTICE

In some extreme cases, the clutch may not separate from the crankshaft. Remove the clutch puller bolt and fill the cavity with grease. Replace the clutch puller bolt and tighten it with the impact wrench. The combined mechanical and hydraulic effect will remove the clutch. Remove all excess grease.

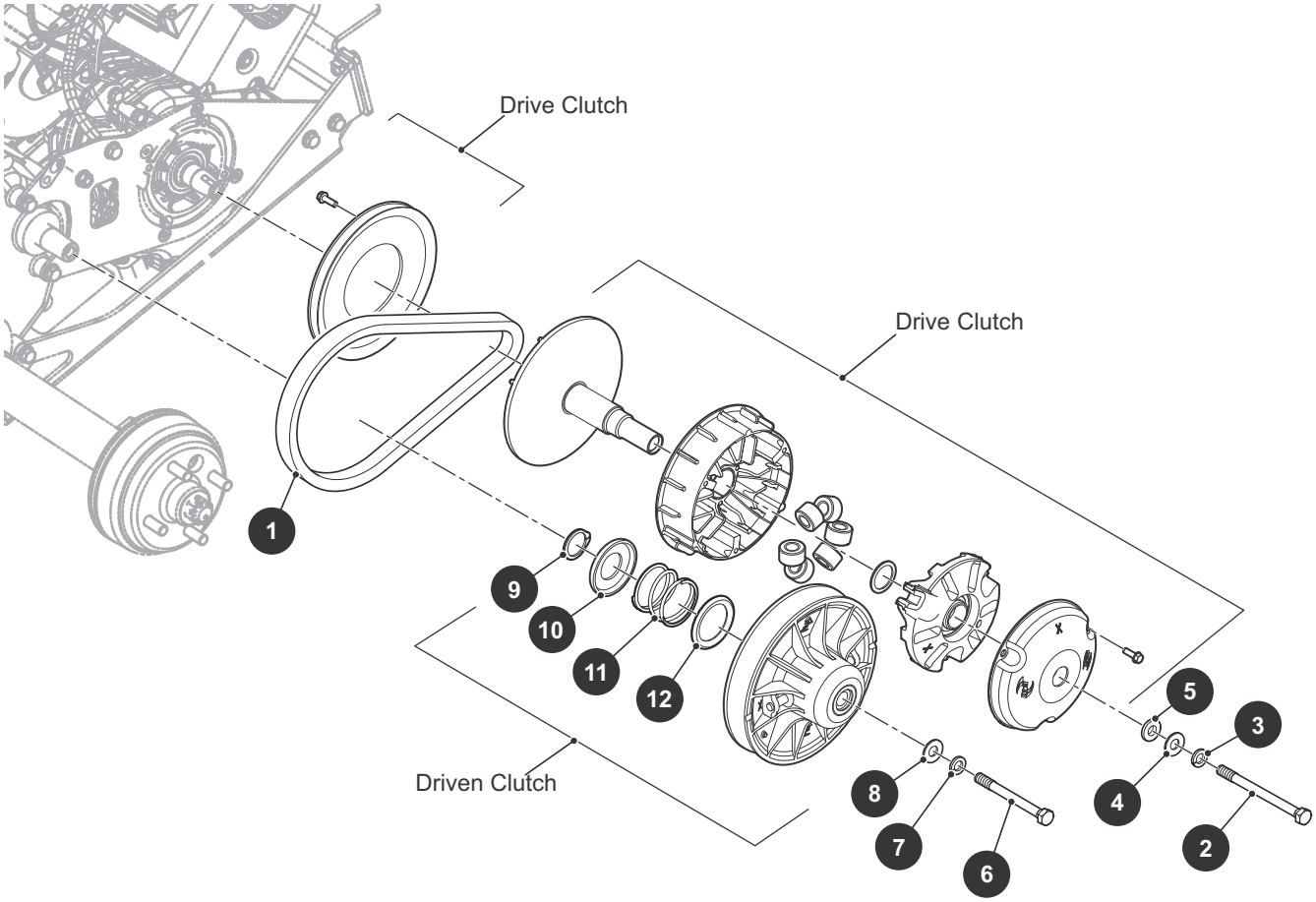

Fig. 3 CVT Components

Read all of Section B and this section before attempting any procedure. Pay particular attention to Notices, Cautions, Warnings and Dangers.

Drive Clutch Installation *(Ref. Fig. 3)*

Clean both the engine crankshaft and the drive clutch bore. Slide the clutch onto the engine crankshaft and rotate the clutch while lightly pushing the moveable sheave in and out several times to seat the clutch with the tapered crankshaft (Ref. Fig. 3).

Install the lock washer (3), conical washer (4) and clutch washer (5) onto the clutch bolt (2).

Apply thread sealant to the threads of the clutch bolt (2) and install and tighten to the specified torque.

ITEM	TORQUE SPECIFICATION
2	55 - 62 ft. lbs. (74 - 84 Nm)

Driven Clutch Removal

Tool List	Qty.
Plastic Faced Hammer	1
Clutch Puller, (p/n 608429)	1
External Snap Ring Pliers	1
Wrench, 18 mm	1
Socket, 18 mm	1
Impact Socket, 19 mm	1
Impact Wrench (air or electric)	1
Ratchet	1
Thread Locking Sealant	AR
Phillips Screwdriver	1
Torque Wrench, ft. lbs.	1

Remove the drive belt (1) (Refer to ‘Removing The Drive Belt’ procedure elsewhere in this section).

Remove the passenger side hub cap if equipped and using a 3/4" lug wrench, remove the wheel and tire assembly.

Set park brake and place direction selector in ’Forward’ to place tension on clutches.

Accessing the driven clutch from the passenger side of the vehicle and remove the bolt (6), lock washer (7) and conical washer (8) from the driven clutch.

Install the clutch puller bolt in clockwise position until it bottoms out.

Using an impact tool and a 19 mm impact socket on the clutch puller bolt, remove the clutch then remove the clutch puller bolt and slide the clutch from the rear axle input shaft.

Driven Clutch Repair

NOTICE

Parts must be reassembled in same position as their original position. Mark all components to facilitate accurate reassembly.

Some minor field repairs may be made to the driven clutch. Remove the retaining ring (9) and remove the outer spring retainer (10) (Ref. Fig. 3). Remove the spring (11), inner retainer spring (12) and the moveable sheave (13).

Inspect the shaft for signs of wear and inspect the bushings for signs of deterioration. If there is wear to the point of causing vibration, the clutch must be replaced.

Driven Clutch Assembly

Assemble the moveable sheave (13) to the fixed sheave (14) and insert the spring (11) and inner retainer spring (12) in the pilot hole in the moveable sheave (Ref. Fig. 3). Insert the other end of the spring in the outer retainer spring (10) and rotate counterclockwise 140° before engaging the splines and inserting the retaining ring (9).

Driven Clutch Installation

Clean the rear axle input shaft and slide the clutch onto the shaft (Ref. Fig. 3). Install lock washer (7) and conical washer (8) to the clutch bolt (6) and apply thread sealant to the threads of the clutch bolt. Install the bolt and tighten to the specified torque.

ITEM	TORQUE SPECIFICATION
6	55 - 62 ft. lbs. (74 - 84 Nm)

STORAGE

If the vehicle is to be out of service for an extended period of time, the clutches should **not** be coated with any protecting spray. The drive clutch sheaves may develop some surface rust which will be removed within a few minutes of running time. The driven clutch is aluminum and requires no treatment.

Read all of Section B and this section before attempting any procedure. Pay particular attention to Notices, Cautions, Warnings and Dangers.

NOTES:

Read all of Section B and this section before attempting any procedure. Pay particular attention to Notices, Cautions, Warnings and Dangers.

NOTES:

TABLE OF CONTENTS FOR SECTION 'K'

SECTION TITLE **PAGE NO.**

DIRECTION SELECTOR ..... K - 2
Removing Direction Selector ..... K - 2
Replacing a Micro Switch ..... K - 2
Shift Cable Adjustment ..... K - 2
Neutral Lock Operation ..... K - 2

LIST OF ILLUSTRATIONS

Fig. 1 Direction Selector ..... K - 1
Fig. 2 Neutral Lock ..... K - 3

Read all of Section B and this section before attempting any procedure. Pay particular attention to Notices, Cautions, Warnings and Dangers

NOTES:

Read all of Section B and this section before attempting any procedure. Pay particular attention to Notices, Cautions, Warnings and Dangers.

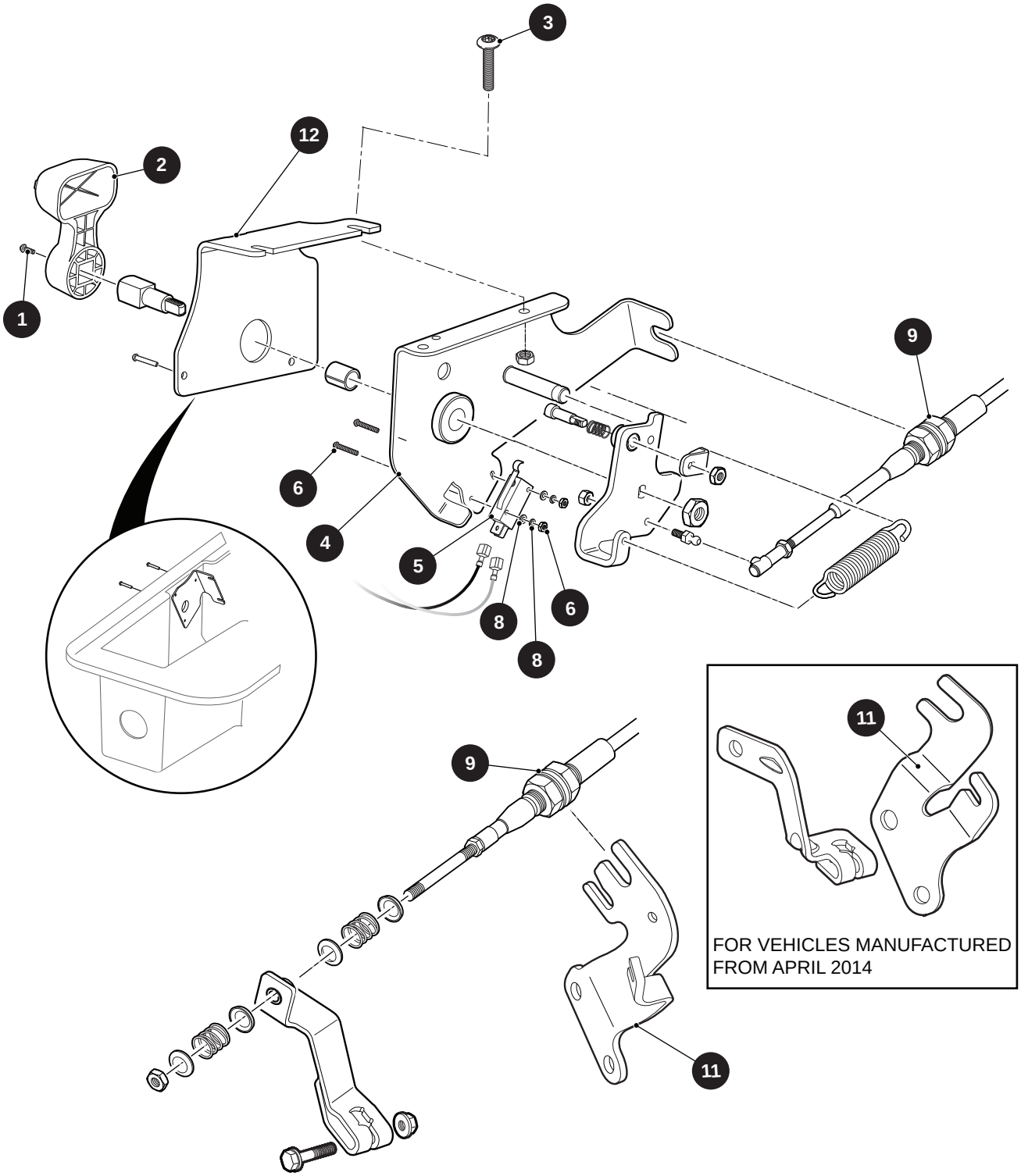

Fig. 1 Direction Selector

Read all of Section B and this section before attempting any procedure. Pay particular attention to Notices, Cautions, Warnings and Dangers.

DIRECTION SELECTOR

Before removing a suspected faulty micro switch, ensure the electrical wires are firmly attached and the wire is in good condition.

Removing Direction Selector

Tools List	Qty.
Torque Wrench, in. lbs	1
Ratchet	1
Socket, 7/16"	2
Socket, 5/16"	1
Wrench, 7/16"	2
Wrench, 5/16"	1
Phillips Screwdriver	1
Digital Volt Ohm Meter (DVOM)	1

NOTICE

Always observe the following warnings when working on or near batteries:

⚠ WARNING

To prevent an electrical arc that could cause an electrical explosion, be sure that the key switch is off and all electrical accessories are turned off before starting work on vehicle.

Never disconnect a circuit under load at a battery terminal.

The battery negative (-) cable must be removed before starting work on vehicle.

Wrap wrenches with vinyl tape to prevent the possibility of a dropped wrench from 'shorting out' a battery, which could result in an explosion and severe personal injury or death.

Prior to removing the direction selector switch from the body, the battery negative cable must be disconnected to prevent the possibility of electrical spark or 'shorting out' the battery, either of which could result in an explosion and severe personal injury or death.

Remove screw (1) securing the handle (2) to the direction selector shaft, and remove handle (Ref. Fig. 2). Loosen the hardware (3) attaching the direction selector bracket (4) to the seat frame and remove direction selector from body.

Replacing a Micro Switch

To replace a micro switch (5), remove the attaching hardware See "Removing Direction Selector" on page 2. Carefully remove the two electrical wires from the switch. Reattach the wires to the new switch. Using a DVOM, test the switch to ensure it is operational before continuing. Once it is determined that the switch is functional, continue reassembly of micro switch to the direction selector and installing to body. Connect wires attaching to the switch and the screws (6), nuts (7) and washers (8) attaching the switch to the assembly to 8 - 11 in. lbs. (0.7 - 0.9 Nm) torque.

Shift Cable Adjustment

The single cable direction selector is a mechanical device that operates a cable connected to the rear axle (Ref. Fig. 1). The cable is sealed and does not require lubrication. Required adjustment should be minimal. Adjust threaded fitting (9) at forward cable mount while selector is in the 'REVERSE' position until direction selector cam will contact both stops, or contacts the reverse stop and maintains no more than an 1/8" gap at the 'FORWARD' stop. If further adjustment is necessary, adjust threaded fitting (10) at the rear axle cable mount (11). Lubricate the direction selector, linkage and related moving parts periodically.

Neutral Lock Operation

The neutral lock is located on the direction selector. To operate neutral lock located on the direction selector, first turn the key switch to 'OFF', place direction selector in 'R' and remove seat. Pull out (1) and rotate (2) the neutral lock pin handle so that the pointed portion of the handle is over the side of the direction selector cam (Ref. Fig. 2). Move direction selector lever towards the area between 'F' and 'R'. During that motion, the pin will snap into the hole in the direction selector mounting bracket (12), preventing any movement of the lever. When in this position, the direction selector remains locked in the neutral position.

⚠ WARNING

Spring loaded mechanism. To prevent possibility of fingers becoming pinched in the direction selector mechanism, hold direction selector lever when releasing neutral lock pin handle.

Read all of Section B and this section before attempting any procedure. Pay particular attention to Notices, Cautions, Warnings and Dangers.

To activate the direction selector, pull the neutral lock pin handle out and rotate until the pointed portion of the handle fits into the hole (3) in the direction selector cam.

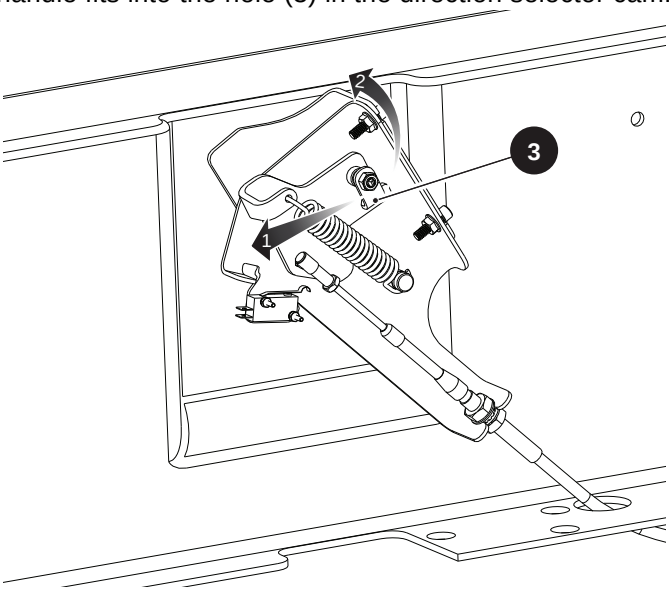

Fig. 2 Neutral Lock

Read all of Section B and this section before attempting any procedure. Pay particular attention to Notices, Cautions, Warnings and Dangers.

NOTES:

TABLE OF CONTENTS FOR SECTION 'L'

SECTION TITLE **PAGE NO.**

CIRCUITS AND CONTROLS ..... **L - 1**

STARTER ..... **L - 1**

GENERATOR ..... **L - 1**

WIRING ..... **L - 1**

TESTING IGNITION CIRCUIT ..... **L - 1**
Testing the Magneto ..... L - 4

TESTING STARTING CIRCUIT ..... **L - 5**

TESTING CHARGING CIRCUIT ..... **L - 5**

INSPECTION ..... **L - 6**

STARTER/GENERATOR ..... **L - 6**
Starter/Generator Removal ..... L - 6
Disassembly ..... L - 6
Repair and Replacement ..... L - 7

BATTERY VOLTAGE TEST ..... **L - 7**

STORAGE OF BATTERY ..... **L - 8**

DVOM (DIGITAL VOLT OHM METER) ..... **L - 8**

TROUBLESHOOTING ..... **L - 8**

POWER SUPPLY ..... **L - 8**

ACCESSORY WIRING ..... **L - 9**

LIST OF ILLUSTRATIONS

Fig. 1 Electrical System Wiring Diagram ..... L - 2
Fig. 2 Electrical System (Physical Location) ..... L - 3
Fig. 3 Resistance Between A - B and A - C ..... L - 4
Fig. 4 Resistance Between B - A and B - C ..... L - 4
Fig. 5 Resistance Between C - B and C - A ..... L - 4
Fig. 6 Starter/Generator ..... L - 6
Fig. 7 Starter/Generator Brush Removal ..... L - 7
Fig. 8 Bearing Removal ..... L - 7
Fig. 9 DVOM ..... L - 8
Fig. 10 Accessory Wiring Diagram ..... L - 10

Read all of Section B and this section before attempting any procedure. Pay particular attention to Notices, Cautions, Warnings and Dangers

NOTES:

Read all of Section B and this section before attempting any procedure. Pay particular attention to Notices, Cautions, Warnings and Dangers.

CIRCUITS AND CONTROLS

The electrical system is a 12 volt negative ground system (Ref. Fig. 1) (Ref. Fig. 2) consisting of a:

- battery
- starter/generator
- voltage regulator
- solenoid
- magneto
- fuse
- key switch

WARNING

To prevent injury or death from inadvertent movement of vehicle, all tests performed requiring starter/generator or engine to rotate must be performed with the rear wheels raised (see Section "B") or the neutral lock engaged (see Section "A").

Follow the lifting procedure in Section "B" of this manual. Place wheel chocks in front of and behind the front wheels. Check the stability of the vehicle on the jack stands before starting any repair procedure. Never work on a vehicle that is supported by a jack alone.

STARTER

When starting the engine, the field coils are in series with the armature and the starter/generator operates as a motor (Ref. Fig. 1). This circuit is controlled by a key switch, fuse, accelerator limit switch and a solenoid. With the key in the **'ON'** position, battery current is available to the accelerator limit switch which remains open until the accelerator pedal is pressed. When the pedal is pressed, the plunger on the switch is released, the contacts close and the ignition circuit is energized. Battery current then energizes the solenoid which closes the contacts and energizes the starter circuit. The starter/generator now functions as a starter to start the engine.

GENERATOR

When the engine is running, the starter/generator functions as a generator. This is used for charging the battery and for the ignition system. Generated output is controlled by the voltage regulator at 14.25 - 14.75 V, without regard to engine speed. However, the charging current will vary depending on the condition of the battery. If it is fully charged, current is controlled at 3 to 5 amps.

WIRING

WARNING

Before performing any test of wiring components, disconnect the battery cables from the battery posts to prevent electrical shock or explosion (see procedure in Section "B").

Electrical tests of the wiring for continuity may be made with a DVOM (Digital Volt Ohm Meter) available through the Service Parts Department (P/N 27481-G01). Any DVOM may be used, however the controls, displays and features may vary depending on the make and model. Set the meter selector to the ohms scale and check continuity between each circuit component as indicated. Example: If a switch is open or if there is a break in the wiring, the meter will display a visual signal. If an analog meter is used it will read infinity (∞).

TESTING IGNITION CIRCUIT

NOTICE

This section assumes the fuel system is functioning and that the engine is receiving fuel.

Tool List	Qty.
Dvom	1
Spark plug (NGK BPR2ES)	1
Spark plug tester	1

WARNING

To prevent possibility of personal injury, never operate the starter unless both spark plugs are installed or the ignition system is disabled. Fuel drawn into the cylinders will be expelled through the spark plug opening and could be ignited by the ignition system or another source, resulting in a fire.

The engine incorporates a magneto type ignition system. There is no distributor.

The engine can be stopped by turning the key switch to the **'OFF'** position. When the accelerator pedal is released, the limit switch contacts open and the ignition circuit is de-energized.

Read all of Section B and this section before attempting any procedure. Pay particular attention to Notices, Cautions, Warnings and Dangers.

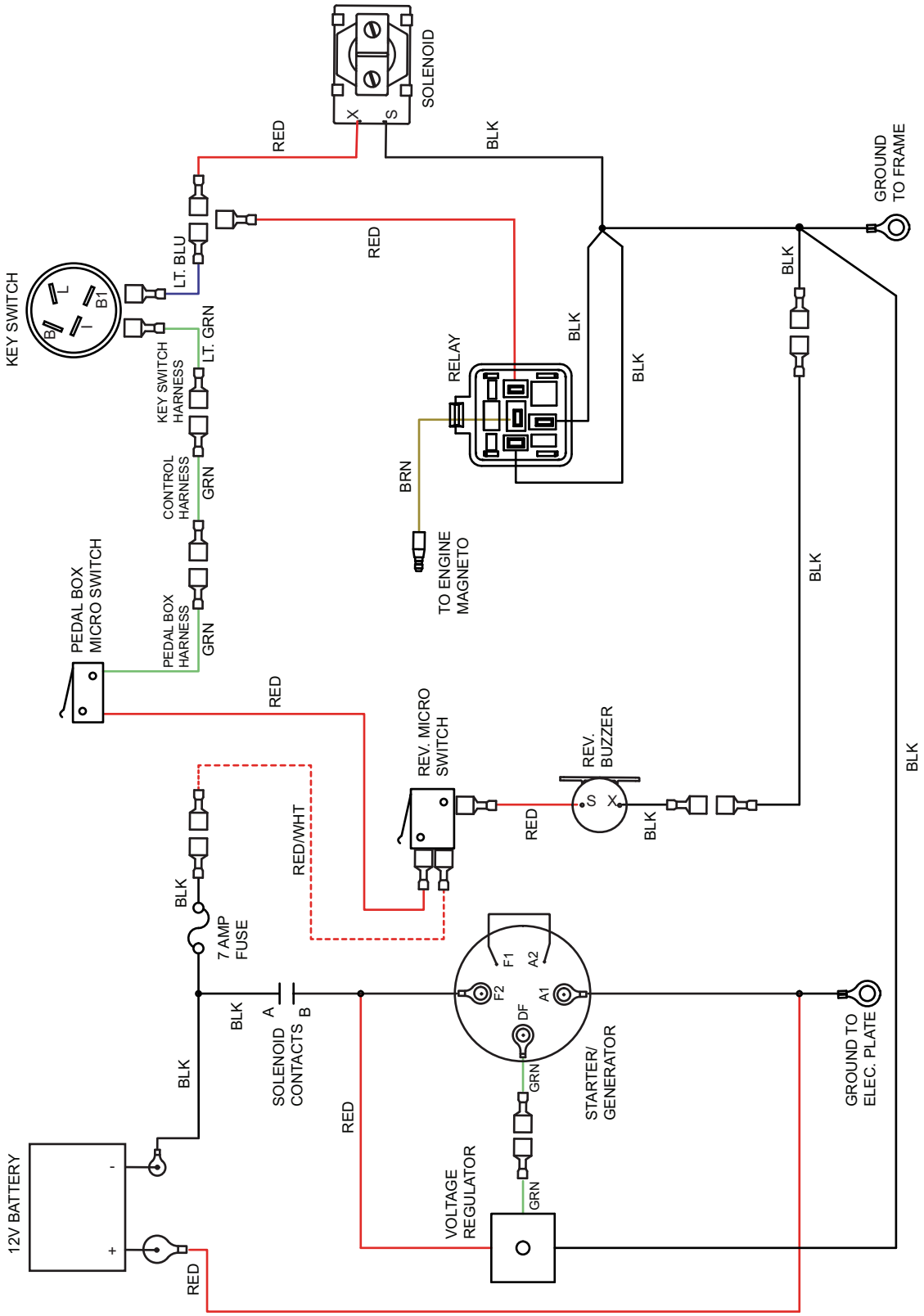

Fig. 1 Electrical System Wiring Diagram

Read all of Section B and this section before attempting any procedure. Pay particular attention to Notices, Cautions, Warnings and Dangers.

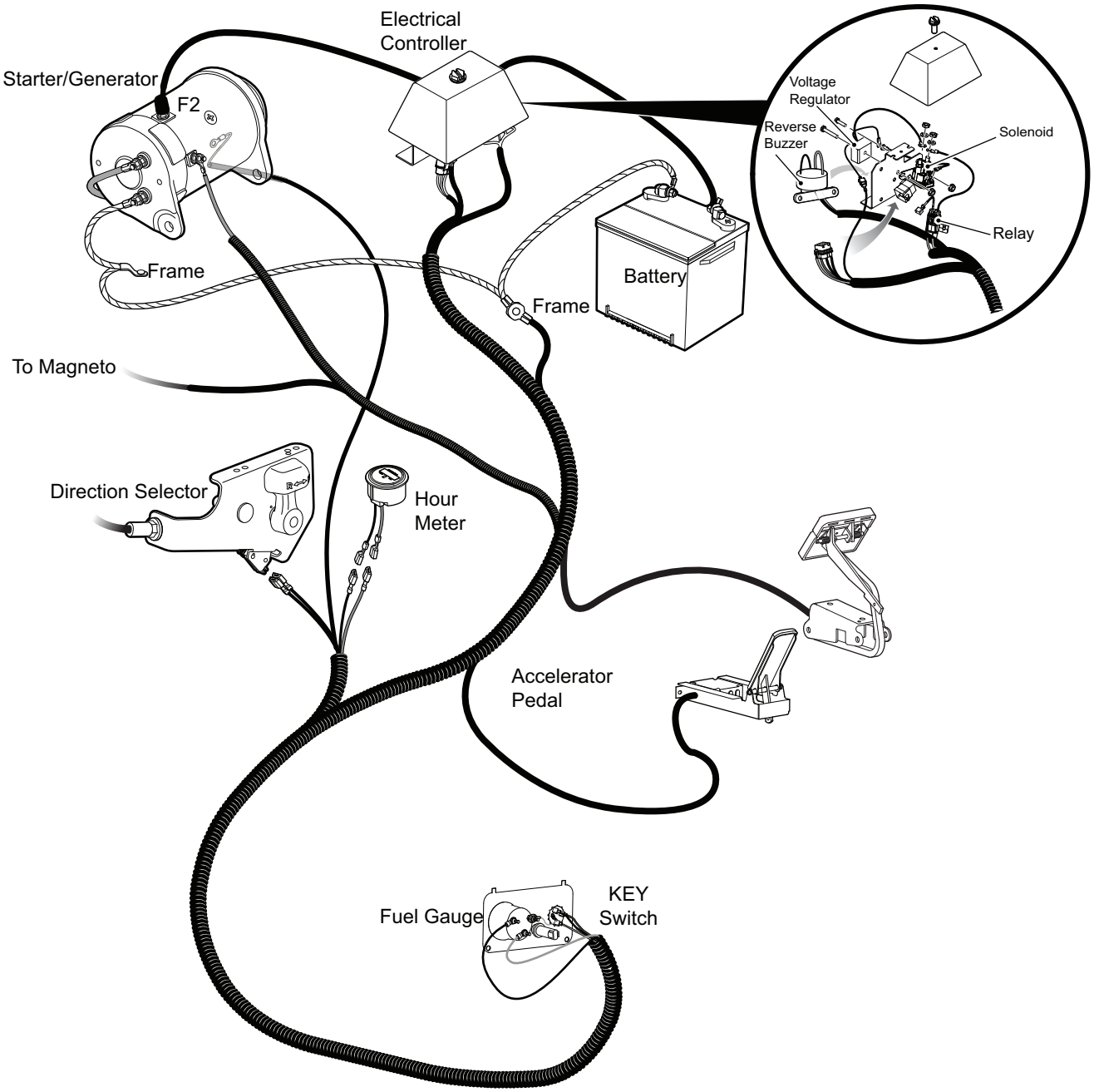

Fig. 2 Electrical System (Physical Location)

CAUTION

Do not arc spark plug wire to ground. Connect to a known good spark plug and ground plug to a clean metal surface (muffler, cylinder, etc.). Permanent damage may be caused to the coil or ignitor if the plug is not grounded properly.

If the engine will **not** run, but the starter will turn the engine, proceed as follows:

1. Check for loose terminals, wires and connections.
2. Check for an electrical discharge through the spark plug wire as follows: Using a spark plug that is known

Read all of Section B and this section before attempting any procedure. Pay particular attention to Notices, Cautions, Warnings and Dangers.

good, and with a spark plug installed in the cylinder, place on a clean grounded engine surface, (muffler, cylinder, etc.). Turn over the engine with the starter. Look for a blue electrical arc at the spark plug electrode.

3. If there is either a weak arc or no arc, try a new spark plug, then check the condition and the tightness of the spark plug wire. Plug wires can be checked by substituting them with good ones.
4. Replace the plug if necessary. Gap the spark plug .028" - .030" (.71 - .76 mm) using a wire type spark plug gauge.

Testing the Magneto

Set the meter to the ohms scale and measure the resistance as shown in the following illustrations.

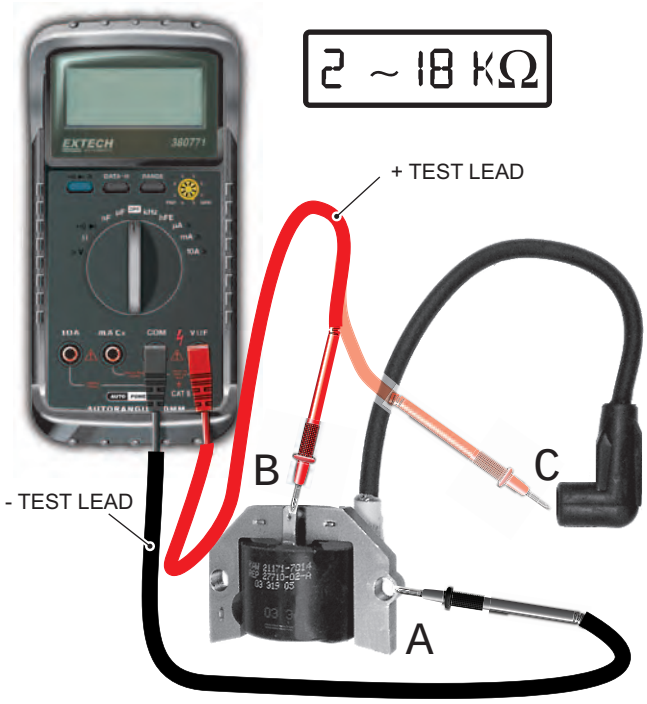

Fig. 3 Resistance Between A - B and A - C

A normal reading with the negative lead on A and the positive lead on B would be: 2 - 18 KΩ.

A normal reading with the negative lead on A and the positive lead on C would be 2 - 18 KΩ.

A normal reading with the negative lead on B and the positive lead on A would be ∞.

A normal reading with the negative lead on B and the positive lead on A would be ∞.

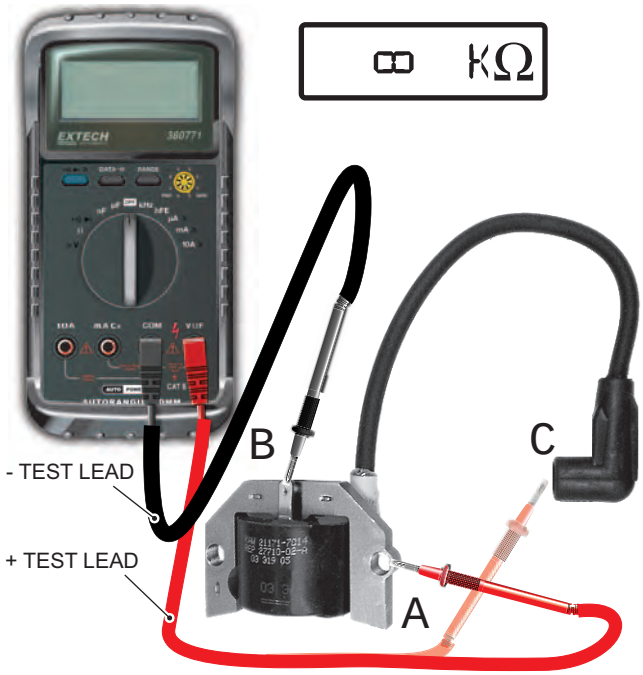

Fig. 4 Resistance Between B - A and B - C

A normal reading with the negative lead on C and the positive lead on A would be: 2 - 18 KΩ.

A normal reading with the negative lead on C and the positive lead on B would be: 10 - 30 KΩ.

If readings obtained are out of the above ranges, replace the magneto.

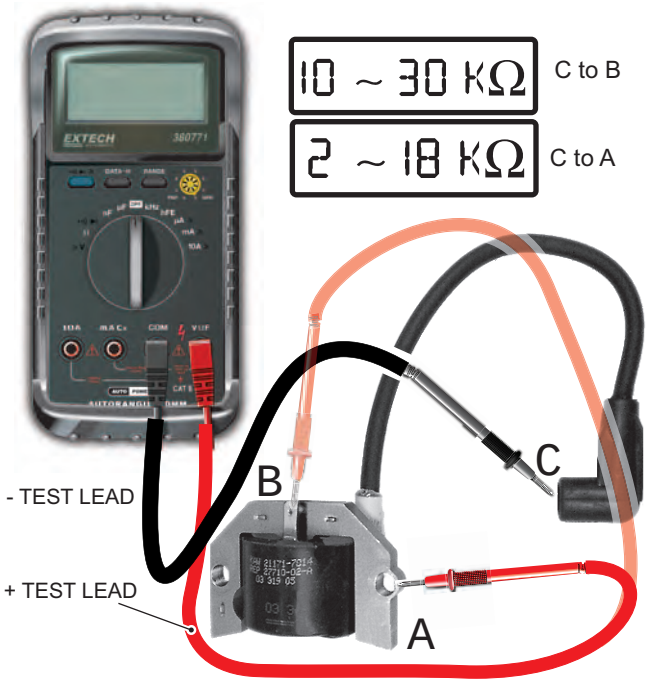

Fig. 5 Resistance Between C - B and C - A

Read all of Section B and this section before attempting any procedure. Pay particular attention to Notices, Cautions, Warnings and Dangers.

TESTING STARTING CIRCUIT

WARNING

To prevent the possibility of injury resulting from vehicle inadvertently starting, disconnect battery for steps 1 through 8 (see Section "B").

Tool List	Qty.
DVOM	1

If the engine will **not** turn over, proceed as following (Ref. Fig. 1):

1. Check the battery for a voltage reading which should be between 12.2 and 12.5 volts. Inspect for loose or dirty battery post connections.
2. Check for a blown in line fuse and replace if necessary with a 7 amp fuse.
3. Check for loose wires at all terminal connections.
4. Check the complete electrical system for correct circuitry.
5. Inspect for worn insulation or bare wires touching the frame. Bare wires will cause a short circuit.
6. Check for continuity through the key switch. Set the DVOM to the ohms (Ω) scale. Detach wires. Place positive (+) probe on one terminal and negative (-) probe on the other terminal. The reading on the meter should be "0" Ω with the switch key in the ***'ON'*** position and a visual signal (∞) with the switch in the ***'OFF'*** position. If the meter does not register, replace the switch. Reconnect the wires.
7. Turn the key switch to ***'OFF'.***
   (a) Place one probe of the DVOM (set to ohms scale) on the red wire at the solenoid. Place the other probe on the key switch terminal with the blue wire.
   (b) Press the accelerator and observe the DVOM. A reading of less than 2 Ω indicates a good limit switch. A reading of greater than 2 Ω indicates that the switch terminals should be checked. A reading of infinity a visual signal (•) indicates that the switch must be replaced. Connect the battery.
8. Check the starting solenoid operation. Turn the key switch to the ***'ON'*** position.
   (a) Place the DVOM (set to the appropriate DC volts scale) negative (-) probe on terminal "A" of the solenoid. Place the positive (+) probe on terminal "B". The DVOM should indicate approximately 12 V.
   (b) Press the accelerator pedal. The DVOM will indicate "0" voltage if the solenoid contacts are closed.
   (c) If "0" voltage is not indicated while the accelerator pedal is pressed, replace the solenoid.

TESTING CHARGING CIRCUIT

Tool List	Qty.
DVOM	1

WARNING

To prevent the possibility of injury resulting from vehicle inadvertently starting, the drive belt must be removed or both rear wheels raised (see procedure in Section "B").

The charging circuit consists of a starter/generator, voltage regulator and battery (Ref. Fig. 1). The solenoid must be functional in order to start the vehicle, but is not considered part of the charging circuit.

1. If the battery charge is inadequate (less than 11 VDC), proceed as follows:
   (a) Check the battery voltage and inspect for loose or corroded terminal posts and connections. Check electrolyte level.
   (b) Check charging circuit component terminals for proper, clean, tight connections.
   (c) Check for charging voltage as follows:
      1) Raise the vehicle (see procedure in Section B) so that both rear wheels are free to rotate.
      2) With the engine off, measure the voltage at the battery's terminals by placing the negative (-) probe on the negative (-) post and the positive (+) probe on the positive (+) post of the battery. Note the reading.
      3) Attach the DC voltmeter across the regulator's red and black leads.
      4) Start the engine and accelerate to governed speed.
      5) The meter should read higher than before starting the engine. In a reasonable amount of time, the reading should settle between 14 and 15 volts, indicating the regulator is functioning properly.
      6) If no increase over battery voltage is observed, there is a malfunction in the charging circuit.
      7) If the reading is **above** 15 volts, check to assure the wiring harness and generator field

Read all of Section B and this section before attempting any procedure. Pay particular attention to Notices, Cautions, Warnings and Dangers.

winding (green lead) is not grounded. If it is not, replace the regulator.

8) If the reading is **below** 14 volts, disconnect the regulator's green field wire from the system harness. Temporarily connect the green field wire to ground. If the voltage rises above its prior reading, replace the regulator.

9) If the above procedures do not correct the problem, check for faults in the vehicles wiring harness and/or generator.

Inspection

1. Inspect the commutator for wear or damage.
2. Inspect the brush assembly for wear and damage to the brush holder insulators. Check the brushes for length, approximately 11/16" (17 mm) or to the line marked on the brush and signs of carbonization.
3. Inspect the armature for distortion or broken wires.
4. Inspect the field coil insulators and lead wire.
5. Check the bearings for free rotation and lack of end play on shaft. Replace if necessary.

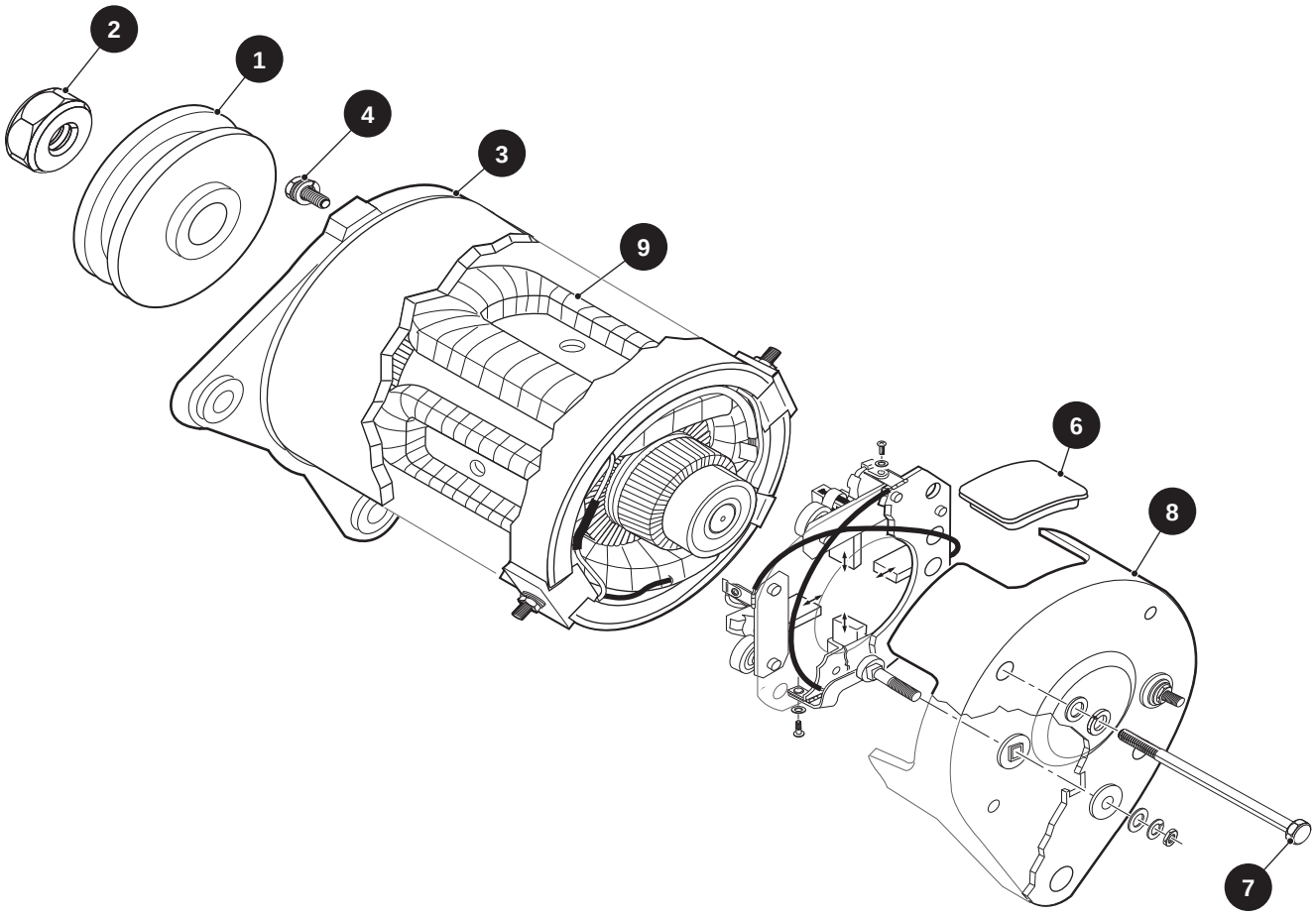

Fig. 6 Starter/Generator

STARTER/GENERATOR

Starter/Generator Removal

See ENGINE section.

Disassembly

Tool List	Qty.
DVOM	1
Wrench, 24 mm	1
Wrench, 10 mm	1
Wrench, 6 mm	1
Wrench, 5 mm	1
Socket, 10 mm	1
Phillips Screwdriver	1
Two Jaw Puller	1
Straight Blade Screwdriver	1
Ratchet	1
Torque Wrench, ft. lbs.	1
Torque Wrench, in. lbs.	1
Clean Cloth	1

Read all of Section B and this section before attempting any procedure. Pay particular attention to Notices, Cautions, Warnings and Dangers.

NOTICE

In general, starter/generator service is best performed by trained motor technicians who have the knowledge and equipment to overhaul the unit. Some checks and repairs however, can be accomplished by a skilled mechanic. Make your own evaluation of the equipment and skills available before starting disassembly.

Hold the pulley (1) and remove the pulley nut (2). Remove the pulley, screws (4) and front cover (3) (Ref. Fig. 6).

Remove the brush covers (6) by prying out with a screwdriver. Pull up on the brush springs and move to the side of brushes, slide the brushes out approximately 1/4" (6 mm) (Ref. Fig. 7). Remove the through bolts (7) and the rear cover (8). Remove the frame and field coils (9). Remove the 5 mm screws from the brush holder and 6 mm nuts from A1 and A2 terminals. Remove the brush holder. If the bearing needs to be replaced, use an automotive style two jaw puller to remove the bearing from armature (Ref. Fig. 8).

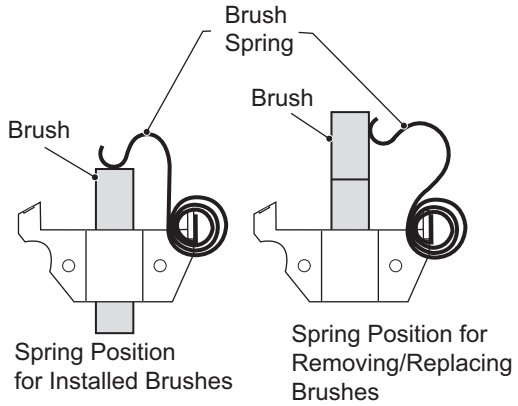

Fig. 7 Starter/Generator Brush Removal

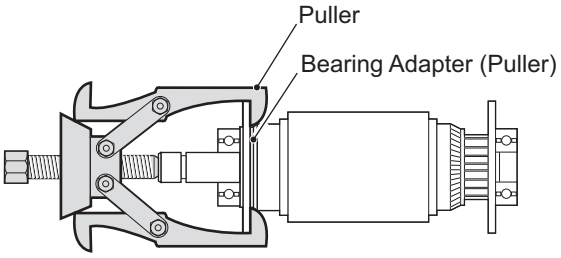

Fig. 8 Bearing Removal

Repair and Replacement

1. Commutator - Clean with a soft, clean cloth.
2. Replace any damaged or cracked brush holders or brushes worn to less than 11/16" (17 mm) in length or to the line marked on the brush.
3. Test the insulation between the core and the commutator segments and shaft with a circuit tester. If continuity is indicated, the insulation is defective and the armature must be replaced.
4. With the brushes removed, using a DVOM, check the field coils for continuity between ‘F1’ and ‘F2’ and ‘DF’ and ‘F1’. If an open circuit exists, replace the field coils. Check for continuity between all four terminals and the frame (outer shell). If continuity is indicated, the field coils are grounded against the frame and the field coils must be replaced.
5. Clean all parts to be reinstalled and reassemble in the reverse order of disassembly. Tighten bolts and nuts to the following values:
   - 4 mm - torque to 15 - 21 in. lbs. (17 - 24 kg/cm)
   - 5 mm - torque to 30 - 43 in. lbs. (35 - 50 kg/cm)
   - 6 mm - torque to 52 - 74 in. lbs. (60 - 85 kg/cm)
   - 14 mm - torque to 33 - 40 ft. lbs. (45 - 55 Nm)

Tighten **terminal nuts** to the following torques:

- F1 - F2 - torque to 43 - 52 in. lbs. (50 - 60 kg/cm)
- DF - torque to 26 - 35 in. lbs. (30 - 40 kg/cm)

BATTERY VOLTAGE TEST

Battery voltage can be checked using a voltmeter. Attach the negative (-) lead of the DVOM to the ground terminal of the battery. The positive (+) lead is then attached to the positive battery terminal. The voltage reading obtained should be 12 volts or above. If the reading is below 12 volts, the battery requires either charging or replacement.

⚠ WARNING

Hydrogen gas formed during battery charging is explosive and can cause personal injury or death. Avoid any electrical spark or open flame near battery.

NOTICE

If the temperature of the battery or the ambient temperature is below 60° F (15° C), the capacity of the battery will be less. It will require more time to charge. A cold battery will build up voltage and more rapidly reduce the charging rate.

Batteries that are new or have been stored must be fully charged before being tested or placed in vehicle.

Read all of Section B and this section before attempting any procedure. Pay particular attention to Notices, Cautions, Warnings and Dangers.

CAUTION

Do not overcharge battery.

STORAGE OF BATTERY

A battery that is removed from service for storage must be cared for as follows:

For battery removal see 'Battery Removal' in Section B. Charge fully. Cover terminals with petroleum jelly to prevent oxidation (use commercially available battery protectant when installed in vehicle). Store in a cool place not below 32° F (0° C) or above 80° F (27° C) Battery should be charged every 30 days using a 2 amp trickle charger.

DVOM (DIGITAL VOLT OHM METER)

The DVOM shown (Ref. Fig. 9) is representative only, the actual model may vary depending on availability, and is available through the Service Parts Department as P/N 27481-G01. For the purpose of this section, the red probe (+) and black probe (-) are used. Any DVOM may be used, however the controls, displays, accuracy and features may vary depending on the make and model. Always follow the meter manufacturer's recommendations and instructions for the use and care of the meter.

Fig. 9 DVOM

TROUBLESHOOTING

In order to effectively troubleshoot the circuits that include the horn, lighting, brake/turn signals and gauges, the technician must be able to use the wiring diagram and a DVOM.

The wiring diagram shows the path followed by a voltage or signal from its origination point to its destination. Each wire is indicated by color and is divided into the main harness and the dash harness (Ref. Fig. 1).

The technician should use simple logic troubleshooting in order to reduce the number of steps required to isolate the problem.

Example 1: If the vehicle will not start and none of the lights function (or burn dimly) the battery should be tested before trying to troubleshoot the lighting circuit.

Example 2: If a problem occurs in the lighting circuit that results in only one of the headlights not working, there is no reason to check battery wiring or the fuse since it is obvious that voltage is present. Since bulbs will burn out over time, the obvious place to start is at the headlight that is not functioning. If power is present at the connector and the ground wiring is satisfactory, the only possibilities that exist are a burned out bulb or a poor contact between the connectors and the headlight.

If power is not present but the other headlight functions, a wiring problem is indicated between the two headlights.

In some cases where battery voltage is expected, the easiest way to test the circuit is to set the DVOM to DC volts and place the negative (-) probe of the DVOM to the negative battery terminal. Move the positive (+) probe to each wire termination starting at the battery and working out to the device that is not working. Be sure to check both sides of all switches and fuses.

When no battery voltage is found, the problem lies between the point where no voltage is detected and the last place that voltage was detected. In circuits where no voltage is expected, the same procedure may be used except that the DVOM is set to continuity. Place the negative (-) probe on a wire terminal at the beginning of the circuit and work towards the device that is not working with the positive (+) probe. When continuity is no longer indicated, a failed conductor or device is indicated

POWER SUPPLY

Tool List **Qty.**

DVOM 1

1. Check for loose or bare wires

Check for loose wires at each terminal connection and for worn insulation or bare wires touching the frame. **Bare wires may cause a short circuit**.

Read all of Section B and this section before attempting any procedure. Pay particular attention to Notices, Cautions, Warnings and Dangers.

NOTICE

If any DVOM readings indicate a faulty wire, it is recommended that the condition of the terminals and wire junction be examined. A faulty wire should be replaced with one of the same gauge and color and wired between the correct components and wire tied to the harness bundle. The faulty wire should be cut back close to the harness and the ends protected with vinyl electrical tape.

2. Check battery condition

Check for adequate battery volts (nominal 12 VDC) by setting DVOM to 30 VDC range and place the red probe (+) on the battery post with the green wire attached. Place the black probe (-) on the battery post with the black wire attached. A reading of 11 VDC or greater indicates adequate battery condition. No reading indicates (a) a poor connection between the probes and the battery terminals; (b) a faulty DVOM. A voltage reading below 11 volts indicates poor battery condition and the vehicle should be recharged before proceeding with the test.

NOTICE

Due to the resistance of the wires involved within the harness, voltage readings may be somewhat lower than battery voltage. A reading of 1 volt below battery voltage is acceptable.

3. Check power wire

Firmly attach the black probe (-) to the battery post with the black wire attached and the red probe (+) to the green wire terminal at the fuse block. A reading of battery voltage indicates that the power wire is in good condition.

NOTICE

The power wire supplies power to the entire fuse block.

4. Check fuse

Place the red probe (+) to each wire terminal on the fuse block. A reading of battery voltage indicates that the fuse is in good condition. No reading indicates a faulty fuse; replace with a good 15 amp fuse.

ACCESSORY WIRING

After determining that there is power to the fuse panel, and the fuse is good, continue checking the circuit using the procedures previously used to check the power supply, i.e. loose or rusted connections, bare wires, continuity of the wiring from terminal to terminal, operating condition of switch, etc.

Use the wiring diagram (Ref. Fig. 10) to check correct wiring and wire routing. If there is power at the fuse end of the wire, there must also be power at the other end of the wire at the switch or electrical accessory, and eventually at the ground connection. Electricity must flow from the fuse panel through the full length of the circuit to the ground connection. Any interruption of electrical flow must be corrected, whether by repairing or replacing the wire, the switch or accessory

Read all of Section B and this section before attempting any procedure. Pay particular attention to Notices, Cautions, Warnings and Dangers.

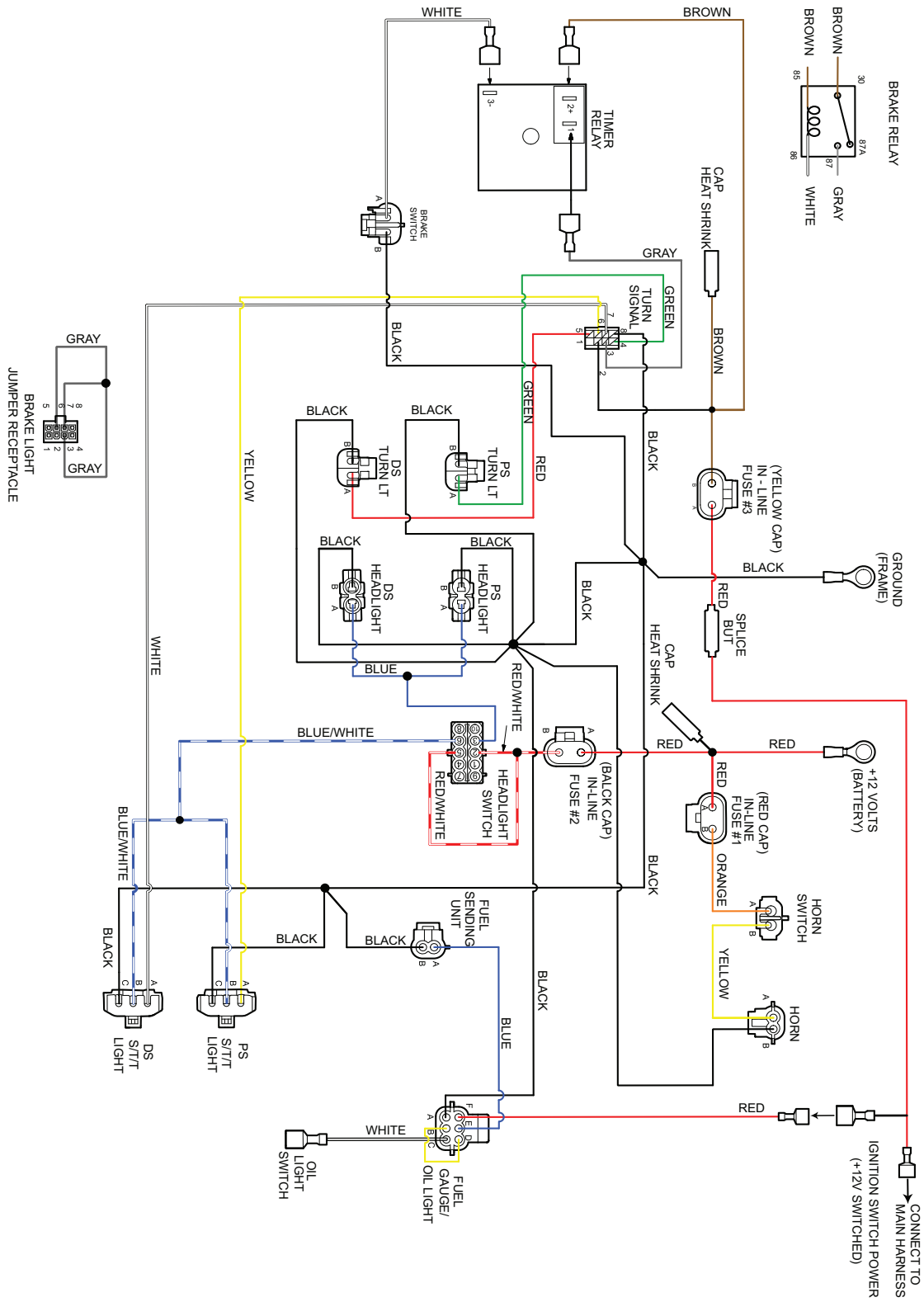

Fig. 10 Accessory Wiring Diagram

TABLE OF CONTENTS FOR SECTION 'M'

SECTION TITLE **PAGE NO.**

BRAKE SYSTEM OVERVIEW ..... M - 1
General Description ..... M - 1
How the Service Brake Works ..... M - 1
Equalizer Link ..... M - 2
Automatic Adjuster Mechanism ..... M - 2
How the Parking Brake Works ..... M - 2
Compensator Assembly ..... M - 3
Kick-Off Actuating Linkage ..... M - 3

TROUBLESHOOTING TABLE ..... M - 4

TROUBLESHOOTING AND INSPECTION ..... M - 6
New Vehicles ..... M - 6
Troubleshooting and Inspection Procedures ..... M - 6
Brake Pedal and Linkage Inspection ..... M - 6
Periodic Brake Performance Test (PBPT) ..... M - 8
Aggressive Stop Test ..... M - 9
Wheel Brake Inspection ..... M - 10

MAINTENANCE AND REPAIRS ..... M - 12
Parts Replacement vs. Repair ..... M - 12
Adjusting Brake Pedal Free Travel ..... M - 12
Brake Drum Removal and Installation ..... M - 13
Wheel Brake Service ..... M - 14
Backing Plate/Entire Wheel Brake Assembly Removal and Installation ..... M - 15
Brake Shoe and Adjuster Replacement ..... M - 15
Brake Cable and Equalizer Assembly Removal and Installation ..... M - 16
Compensator Assembly Removal and Installation ..... M - 17
Brake Pedal Removal and Installation ..... M - 17
Parking Brake Catch Bracket Removal and Installation ..... M - 18
Parking Brake Pedal Removal and Installation ..... M - 18
Pedal Bumper Adjustment ..... M - 18
Parking Brake Release Linkage Removal and Installation ..... M - 18
Parking Brake Kick-Off Cam Removal and Installation ..... M - 18

LIST OF ILLUSTRATIONS

Fig. 1 Mechanical Brake System ..... M - 1
Fig. 2 Wheel Brake Adjustment ..... M - 2
Fig. 3 Parking Brake and Kick-Off Mechanism ..... M - 3
Fig. 4 Compensator Assembly ..... M - 3
Fig. 5 Troubleshooting Table ..... M - 4
Fig. 6 Brake Pedal Bumper Inspection ..... M - 6
Fig. 7 Brake Pedal Inspections ..... M - 6
Fig. 8 Checking for Excessive Free Travel ..... M - 7
Fig. 9 Equalizer and Compensator ..... M - 7
Fig. 10 Parking Brake Pedal Hinge Inspection ..... M - 8
Fig. 11 Kick-Off Cam Inspections ..... M - 8
Fig. 12 Periodic Brake Performance Test ..... M - 9
Fig. 13 Equally Load Vehicle ..... M - 10
Fig. 14 Adjuster Mechanism ..... M - 11
Fig. 15 Brake Shoe Wear ..... M - 12
Fig. 16 Orientation of Brake Shoe Springs ..... M - 12
Fig. 17 Free Travel Adjustment ..... M - 13
Fig. 18 Check Clevis Pins ..... M - 14

TABLE OF CONTENTS FOR SECTION ‘M’ (CONT.)

SECTION TITLE **PAGE NO.**

Fig. 19 Checking Parking Brake Latching Pressure ..... M - 14
Fig. 20 Brake Assembly ..... M - 14
Fig. 21 Wheel Brake Lubrication Points ..... M - 15
Fig. 22 Backing Plate Removal and Installation ..... M - 16
Fig. 23 Brake Shoes and Springs ..... M - 16
Fig. 24 Setting Adjuster Screw ..... M - 17
Fig. 25 Brake Cable, Equalizer and Compensator ..... M - 17
Fig. 26 Brake Pedal Removal and Installation ..... M - 18
Fig. 27 Catch Bracket and Latch Arm ..... M - 18
Fig. 28 Pedal Bumper Adjustment ..... M - 19
Fig. 29 Parking Brake Release Linkage and Kick-Off Cam ..... M - 19

Read all of Section B and this section before attempting any procedure. Pay particular attention to Notices, Cautions, Warnings and Dangers.

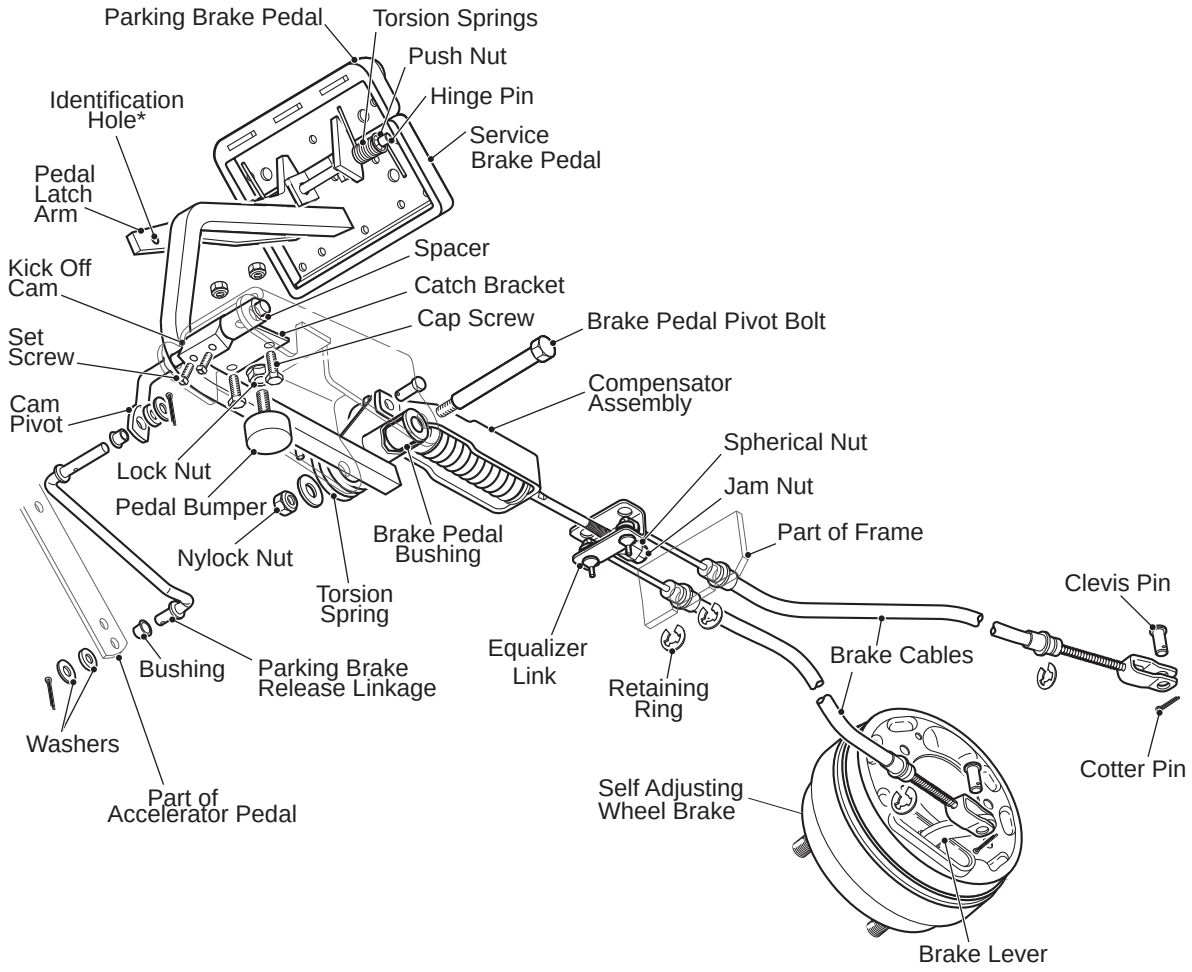

Fig. 1 Mechanical Brake System

BRAKE SYSTEM OVERVIEW

General Description

This vehicle is equipped with a mechanically activated rear drum brake system. The brake system consists of a service brake and parking brake pedal, parking brake release linkage, equalizer link, brake cables and self adjusting wheel brake assemblies (Ref. Fig. 1).

Although the brake system is similar to an automobile, it is **different in important ways**. The system operates in a very severe environment. Fertilizer, dust, grass clippings, tree roots and other objects can cause corrosion and physical damage to the brake components. Unlike automotive hydraulic brakes, mechanical brakes depend on the travel of the brake cables to move the brake shoes against the brake drums. The travel of the brake cables is governed by the brake pedal. If the cables cannot travel far enough to absorb the slack (free travel) in the system and still apply the shoes to the drums, the braking effort at the wheel brake will not be adequate. The self adjusting mechanism in the wheel brakes requires enough cable travel at the wheel brake to work reliably. When the brake is released, there must be slack in the system so the brakes will release fully and the adjusters will function. Free pedal travel, pedal force, shoe to drum clearance and braking capability are closely related. It is very important to maintain the proper relationships to assure braking performance and the best wheel brake adjustment.

How the Service Brake Works

Depressing the service brake pedal pulls the equalizer link, which is connected to the brake cables (Ref. Fig. 1). The first part of the pedal travel removes slack from the

Read all of Section B and this section before attempting any procedure. Pay particular attention to Notices, Cautions, Warnings and Dangers.

system. Continued motion of the brake pedal pulls both the left and right brake cables. Each brake cable pulls a brake lever which pushes the rear brake shoe against the brake drum. When the rear shoe contacts the brake drum, it can no longer move rearward. Additional pedal (and cable) travel causes the actuator bracket (moving anchor) to move and applies force to the front shoe, pushing it against the brake drum. The force applied to the front and rear shoes is approximately equal. As the shoes contact the moving brake drum, the shoes try to move in the direction of drum rotation. This movement results in the typical brake shoe wear patterns.

Equalizer Link

The equalizer link balances braking between the driver and passenger sides of the vehicle. Variations in wheel brake adjustment, cable friction and manufacturing tolerances may cause the equalizer to be slightly misaligned. This misalignment is normal.

Automatic Adjuster Mechanism

CAUTION

Never manually adjust the brakes at the star wheel. Doing so will cause permanent damage to the adjuster assembly and result in a gradual loss of brakes.

The wheel brakes are equipped with an automatic adjuster mechanism that is designed to compensate for brake shoe wear and eliminate the need for manual brake shoe adjustment. Do not manually adjust the brakes by prying back the adjuster arm and turning the star wheel. Permanent damage to adjuster will result.

Adjustment takes place only when the brake is fully applied and released **while the vehicle is moving** (Ref. Fig. 2). It is very important that the brake cables permit the brake levers to release fully when the brake pedal is in the released position.

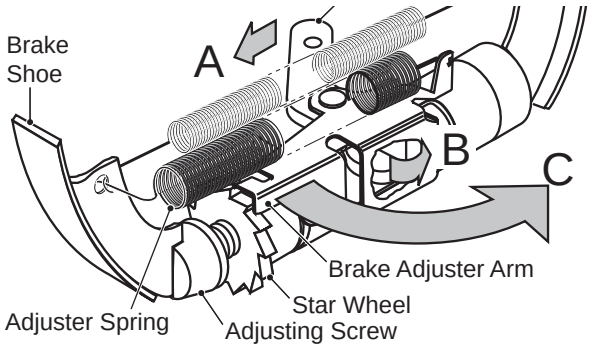

Fig. 2 Wheel Brake Adjustment

Brakes adjust only while the vehicle is moving.

When the brake pedal is depressed, the brake lever moves toward the front of the vehicle (A).

The other end of the brake lever moves to the rear of the vehicle (B) where it contacts the brake adjuster arm, causing it to move.

The brake adjuster arm moves away from the star wheel (C). The amount of adjuster travel is limited by the amount of brake shoe travel required to contact the brake drum. The amount of travel increases as the brake shoe lining wears.

When the brake pedal is released, the adjuster spring retracts the brake adjuster arm which contacts the star wheel. Note that adjustment only takes place when the brake pedal is released while the vehicle is in motion.

If the brake shoes have worn far enough to permit the brake adjuster arm to contact the next tooth of the star wheel, the star wheel will be advanced by the tension applied to the adjuster arm by the adjuster spring.

If the brake shoes have not worn enough to permit the brake adjuster arm to contact the next tooth of the star wheel, the brake adjuster arm will move on the flat of the star wheel. The star wheel does not rotate and no adjustment occurs.

How the Parking Brake Works

The parking brake is operated by a smaller pedal which extends across the top of the service brake pedal. It is attached to the service brake pedal with a hinge pin and is spring loaded (Ref. Fig. 3).

Read all of Section B and this section before attempting any procedure. Pay particular attention to Notices, Cautions, Warnings and Dangers.

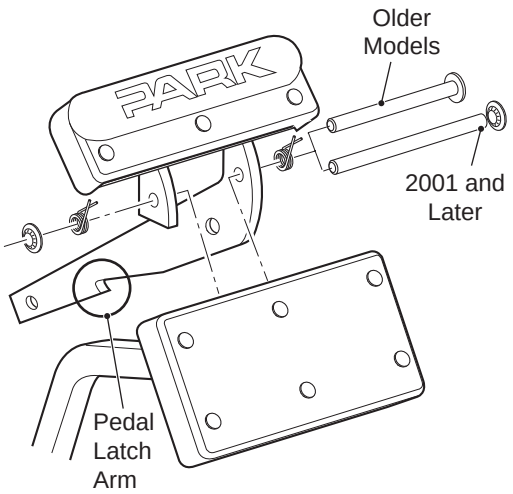

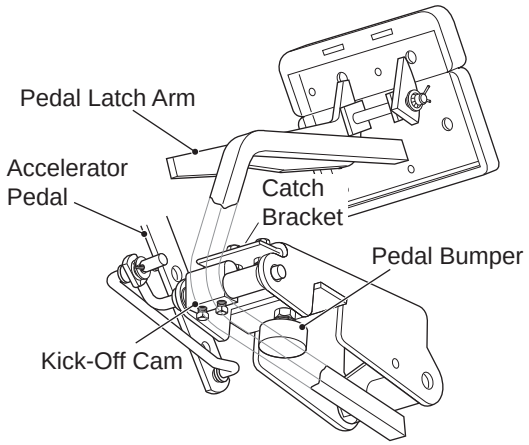

Fig. 3 Parking Brake and Kick-Off Mechanism

Depressing the parking brake pedal moves the latch arm against the catch bracket. As the parking brake is depressed, the service brake is applied until the notch in the latch arm engages with the catch bracket. The service brake pedal is held in the applied (down) position by the catch bracket. The latch arm is held in position by the tension in the brake linkage. The Parking Brake can be released by two methods:

1. Depressing the service brake, which permits the spring loaded Parking Brake pedal to return to its original position, disengaging the latch arm from the catch bracket. This is the preferred method which minimizes wear on components.

2. Pressing the accelerator pedal rotates the kick-off cam which forces the pedal latch arm to move away from the catch bracket. The spring loaded Parking Brake pedal returns to its original position, releasing the brake.

Compensator Assembly

The compensator assembly contains a spring, which is compressed until the stop tube within the spring is engaged and the linkage becomes solid (Ref. Fig. 4). The brake compensator assembly applies a spring load to the parking brake system and insures that the parking brake remains under tension whenever it is engaged

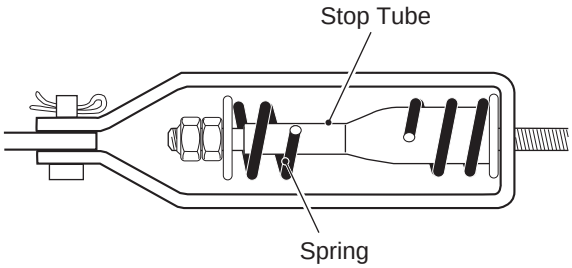

Fig. 4 Compensator Assembly

Kick-Off Actuating Linkage

The kick-off actuating linkage may require periodic adjustment to compensate for the normal wear. Replacement of any linkage components will also require an adjustment.

Read all of Section B and this section before attempting any procedure. Pay particular attention to Notices, Cautions, Warnings and Dangers.

TROUBLESHOOTING TABLE

Refer to the following troubleshooting table only after the thorough visual inspection, Periodic Brake Performance Test (PBPT), and Aggressive Stop Test is performed (Ref. Fig. 5).

Condition	Possible Cause	Correction
Fails Brake Performance Test by stopping in a longer distance than normal	Wheel brake failure due to severely worn or damaged components	Replace all severely worn or damaged components
	Brake pedal not returning Brake not adjusting	Check for binding of brake pedal Check brake pedal free travel Check brake cables Check brake adjusters Check pedal pivot
	Brake shoes wet	Check again when shoes are dry
	Brake cables damaged or sticky	Check brake cable and replace if sticky or damaged
	Brake shoes severely worn	Replace
	Brake shoes glazed	Sand shoes with emery cloth provided that shoes have .06" (1.5 mm) min. material
	System not adjusted properly	Check and adjust per manual
	End of brake cable loose from anchor brackets	Check and repair
	Cracked brake drum	Replace
In excess of 1 1/8" (2.9 cm) free pedal travel (Soft Pedal) **In Excess of 2 1/4" (5.4 cm) free peda travel (Soft Pedal)**	Low pedal force at parking brake latch	Adjust per manual
	Brake cables damaged	Replace
	Brake return bumper out of adjustment	Adjust per manual
	End of brake cable loose from anchor brackets	Check and repair
	Wheel brake failure due to severely worn or damaged components	Replace all severely worn or damaged components
	System not adjusted properly	Adjust per Manual
Less than 7/8" (2.2 cm) free pedal travel (Hard Pedal) **Less than 2" (5 cm) free pedal travel (Hard Pedal)**	High pedal force at parking brake latch	Adjust per Manual
	Brake cables damaged or sticky	Check brake cable and replace if sticky or damaged
	System not adjusted properly	Check and adjust per manual
	Wheel brake failure due to severely worn or damaged components	Replace all severely worn or damaged components
Neither wheel locks when park brake is latched. (Note: At full speed the wheels may not lock, but should brake aggressively).	Incorrect compensator spring adjustment.	Return to factory specification
	Excessive brake pedal free travel	Adjust per manual

Fig. 5 Troubleshooting Table

Read all of Section B and this section before attempting any procedure. Pay particular attention to Notices, Cautions, Warnings and Dangers.

Condition	Possible Cause	Correction
Unequal braking (one wheel locks while other rotates)	Wheel not locking is not adjusting	Check brake operation of wheel that is **not** locking
	Sticky/dragging cable	Check for brake lever return Check that brake levers return at equal rate - (Indication of dragging cable)
	Cracked brake drum	Replace
	Brake shoes wet or glazed	Check again when shoes are dry
	Rusted or sticky brake pivot hardware	Replace
Neither wheel locks	Brake system requires complete adjustment	Adjust entire system
	Brake pedal not returning	Check for binding of brake pedal Check brake pedal free travel
Grabbing brakes (oversensitive)	Moisture has caused surface rust on drums	Apply moderate force to pedal while at maximum level ground speed to remove rust until condition is relieved.
	Brake Pivot binding	Check and replace poor components
Parking brake hard to latch	Inadequate free play	Adjust pedal free travel at spherical nut and check that wheel brake actuators are returning fully
	Sticky/dragging cable	Check for brake lever return Check that brake levers return at equal rate - (Indication of dragging cable)
	Dragging shoes	Check wheel brakes
Parking brake will not stay latched	Excessive wear	Check for worn latch mechanism

Fig. 5 Troubleshooting Table

Read all of Section B and this section before attempting any procedure. Pay particular attention to Notices, Cautions, Warnings and Dangers.

TROUBLESHOOTING AND INSPECTION

New Vehicles

A new vehicle will undergo an initial break-in of components including brake cables and brake shoes. In this break-in period, it is not uncommon for the brake pedal free travel (and the effort required to latch the parking brake) to change. The timing of this change varies with terrain and the driving habits of the operators. When this occurs, the brake linkage should be adjusted. See "Adjusting Brake Pedal Free Travel" on Page M - 12. After this initial period, no further adjustments should be required until routine maintenance is scheduled.

Troubleshooting and Inspection Procedures

To troubleshoot the mechanical brake system, inspect the brake pedal and linkage to find worn or damaged parts per the Troubleshooting Table. Then, perform the Periodic Brake Performance Test to evaluate system performance. Based on the results of the inspection and tests, refer to the Troubleshooting Table (Ref. Fig. 5) to evaluate symptoms and repairs. If required, disassemble the wheel brake to locate and correct internal faults.

Instructions for removal or replacement of parts and adjustments referred to in this section of the manual are described in detail under 'MAINTENANCE AND REPAIRS'.

⚠ CAUTION

Satisfactory brake performance does not eliminate the need for routine brake testing and inspection as shown on the Periodic Service Schedule in Section A. Continued proper brake operation depends on periodic maintenance.

Brake Pedal and Linkage Inspection

1. **Inspect brake pedal return bumper.**
   Be sure that the brake pedal is contacting the pedal return bumper when released, that the bumper is in good condition and that a 1/4 - 3/8" (6 - 9.5 mm) gap exists between the brake pedal arm and the setscrew heads of the kick-off cam (Ref. Fig. 6). Replace or adjust the pedal bumper if required.

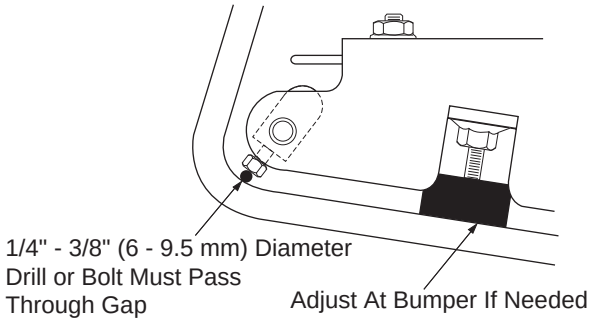

Fig. 6 Brake Pedal Bumper Inspection

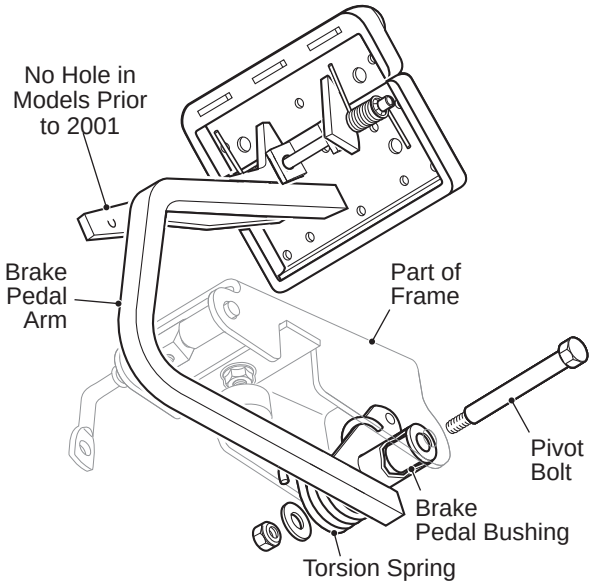

Fig. 7 Brake Pedal Inspection

2. **Check brake pedal return.**
   Apply the brake pedal and release.Check that the brake pedal arm rests against the pedal bumper when released. If the pedal does not return fully or is sluggish, the brake pedal bushings and pivot bolt should be inspected (Ref. Fig. 7). Replace pedal, spring, bushings and bolt as required.

3. **Check the brake pedal free travel.**
   Brake pedal free travel is the distance the pedal moves from rest to the point at which the brake shoes first contact the brake drums. This should not be confused with the light resistance that is felt as the brake pedal is depressed enough to remove slack from the compensator and cables. Too much pedal free travel may indicate wheel brakes not adjusting, wear in the cables and linkages or initial break-in of components. Not enough pedal free travel may indicate improper adjustment of the wheel brake or the brake linkage.

Read all of Section B and this section before attempting any procedure. Pay particular attention to Notices, Cautions, Warnings and Dangers.

Either condition can prevent the brakes from adjusting properly.

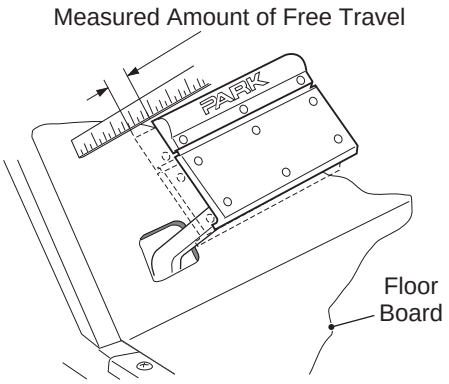

Fig. 8 Checking for Excessive Free Travel

NOTICE

Adjustment of free travel depends on manufacturing date.

The correct brake pedal free travel setting varies depending on the date of manufacture. Older models (latch arm without a 1/4" (6 mm) diameter hole in the lower portion (Ref. Fig. 7) should be set to 2" – 2 1/4" (5 - 6.5 cm) free travel. (with a 1/4" (6 mm) diameter hole in the lower end of the latch arm), free travel should be set to 7/8" - 1 1/8" (2.2 - 2.9 cm) (Ref. Fig. 8).

The parking brake latching force may be checked as a verification after setting brake pedal free travel. The preferred method of checking parking brake latching force is to place a 'bathroom' scale on the service and parking brake pedals. Using both feet, press the scale down evenly against the parking brake pedal until it latches. The parking brake should latch between 65 and 75 lbs. (29 - 34 kg) indicated on the scale

Adjust brake pedal free travel as described in 'MAINTENANCE AND REPAIRS' if required.

4. **Inspect the brake cables.**
   Inspect for damage to the outer cable, fraying of the inner cable or lack of free motion when the pedal is applied and released. Inspect the brake cable supports to be sure the cables are properly secured. If any of these conditions are found, replace both cables and equalizer as a set.
5. **Check the clevis pins.**
   Check clevis pin attaching the brake cables to the brake levers. They must be loose when the brake pedal has been released. If the clevis pins are not loose, but brake pedal free travel is correctly adjusted and the brake cables move freely, the problem is likely in the wheel brake.
6. **Inspect the brake cable equalizer linkage.**
   Inspect for signs of corrosion, damage, wear or excessive misalignment. Replace if corrosion, damage, or wear is found.
7. **Inspect the compensator assembly.**
   Inspect for damage, corrosion or wear. Replace the complete assembly if problems are found. In general, no adjustment will be needed, as the spring assembly is factory calibrated. With the parking brake disengaged check that the compensator spring length is 3 15/16" (10 cm) (Ref. Fig. 9). If an adjustment is required, it should be made at the nuts at the spring facing the front of the vehicle. Tighten the jam nut firmly after adjusting.

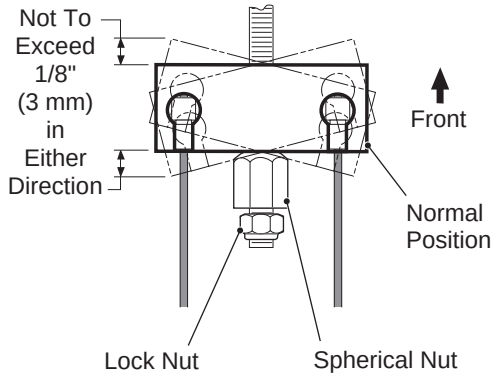

View From Below

NOTE: This dimension is factory pre-set with the parking brake disengaged and is not to be changed.

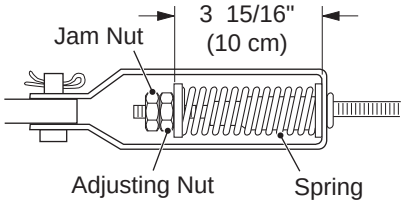

Fig. 9 Equalizer and Compensator

8. **Inspect parking brake pedal hinge.**
   Check for broken or rusted springs. and correct retention of the hinge pin. Operate parking brake pedal to confirm smooth operation of the hinge mechanism (Ref. Fig. 10).
9. **Check the condition and operation of the parking brake latching mechanism.**
   The parking brake should latch firmly and release as

soon as the accelerator pedal is depressed.

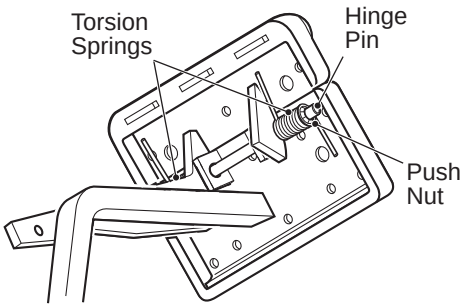

Fig. 10 Parking Brake Pedal Hinge Inspection

WARNING

To prevent serious injury or death from the use of worn parking brake components, do not attempt to re-new worn components. The parking brake latch arm, kick-off cam and catch bracket are hardened parts. Do not grind or file them as doing so will cause the parts to lose their hardness characteristics. New parts must be used.

10. **Inspect catch bracket and latch arm.**
    Replace if showing signs of wear or damage (Ref. Fig. 11).

11. **Inspect the parking brake kick-off cam.**
    Look for wear and for correct adjustment. With the parking brake engaged and fully latched, there must be no gap between the top of the cam and the latch arm. Adjust the kick-off cam (3) if required (Ref. Fig. 11). It is very important that the correct setscrews are used to hold the kick-off cam to the pivot rod. Use of longer screws prevents correct adjustment of pedal bumper (pedal travel) and may prevent the brakes from adjusting properly.

12. **Inspect kick-off cam linkage and bushings.**
    Check for wear and damage. The kick-off cam pivot and bushings should move freely and be free of corrosion. The kick-off cam should rotate when the accelerator pedal is depressed.

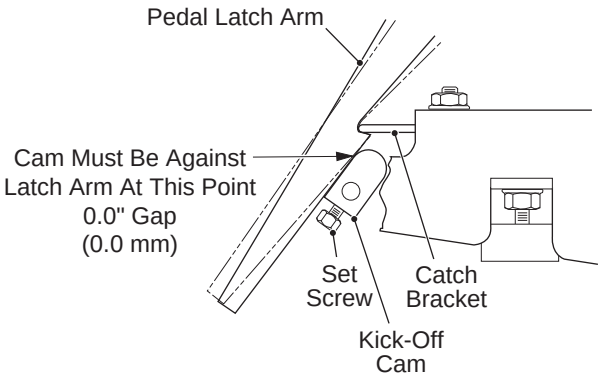

Fig. 11 Kick-off Cam Inspection

Periodic Brake Performance Test (PBPT)

WARNING

To prevent severe injury or death resulting from operating a vehicle with improperly operating brake system, the braking system must be properly maintained. All driving brake tests must be done in a safe location with regard for the safety of all personnel.

The Periodic Brake Performance Test (PBPT) should be performed regularly (see Periodic Service Schedule in the GENERAL INFORMATION AND ROUTINE MAINTENANCE section of this manual) as an evaluation of braking system performance. It is useful as a method of identifying subtle loss of performance over time and as part of troubleshooting a problem vehicle.

Before performing this test, inspect the brake pedal and linkage and correct any problems found including adjusting the brake pedal free travel if required.

The purpose of this test is to compare the braking performance of the vehicle to the braking performance of new or “known to be good” vehicles or to an established acceptable stopping distance (see below). Actual stopping distances will be influenced by weather conditions, terrain, road surface condition, actual vehicle weight (accessories installed) and vehicle speed. No specific braking distance can be reliably specified. The test is conducted by latching the parking brake to eliminate different pedal pressures and to include the affects of linkage mis-adjustment. Significant changes or differences in braking performance will be evident due to mis-adjustment.

Establish the acceptable stopping distance by testing a new or “known to be good” vehicle and recording the stopping location or stopping distance. For fleets of vehi-

Read all of Section B and this section before attempting any procedure. Pay particular attention to Notices, Cautions, Warnings and Dangers.

cles, several vehicles should be tested when new and the range of stopping locations or distances recorded.

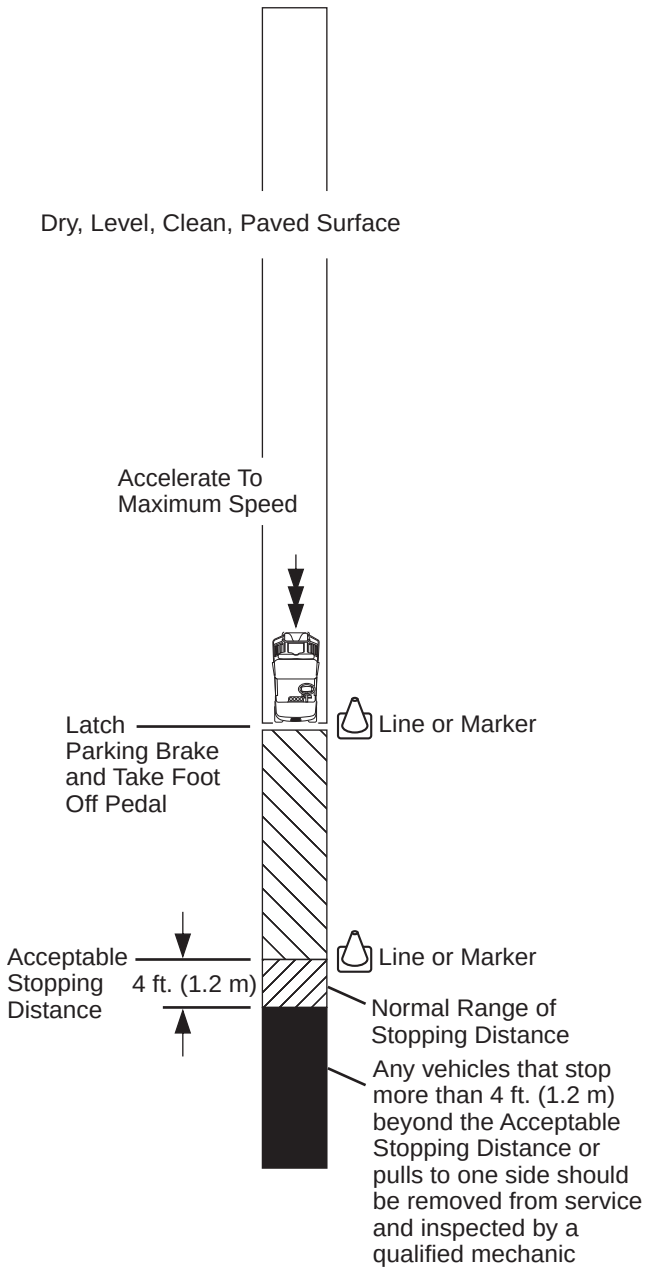

Fig. 12 Periodic Brake Performance Test

NOTICE

Over time, a subtle loss of performance may take place; therefore, it is important to establish the standard with a new vehicle.

Drive the vehicle at maximum speed on a flat, dry, clean, paved surface (Ref. Fig. 12). Quickly depress the brake pedal to latch the parking brake at the line or marker in the test area and remove foot from pedal. The vehicle should stop aggressively. The wheel brakes may or may not lock. Observe the vehicle stopping location or measure the vehicle stopping distance from the point at which the brakes were latched. The vehicle should stop within the “normal” range of stopping distances. If the vehicle stops more than 4 ft. (1.2 m) beyond the acceptable stopping distance or pulls to one side, the vehicle has failed the test.

Repeat test two more times.

If the vehicle fails to pass two of three Periodic Brake Performance Tests, perform the Aggressive Stop Test 10 times as described below, then repeat the Periodic Brake Performance Test three more times (second set of three).

If the vehicle passes two of three Periodic Brake Performance Tests, check that the clevis pins at the brake levers are loose. If they are loose, return vehicle to service. If they are tight, adjust free travel. “Free Travel Adjustment” on Page M - 13 Then repeat the Periodic Brake Performance Tests. If vehicle fails, remove from service and refer to ‘Wheel Brake Inspection’, to evaluate the reason for failure.

Aggressive Stop Test

WARNING

To prevent serious injury or death, all brake tests must be done in a safe location with regard for the safety of all personnel.

Always conduct a visual inspection and evaluate pedal travel before operating a vehicle to verify some braking function is present.

The purpose of this test is to attempt to fully expand and release the brake adjusters on a vehicle which has failed the first set of Periodic Brake Performance Tests. It is important that the technician/mechanic exercise care and perform the test in a non-congested area with regard for the safety of all personnel.

To perform an Aggressive Stop Test, equally load both sides of the vehicle (Ref. Fig. 13) and apply maximum force and travel to the service brake pedal while moving. Do not latch the parking brake. Do this a total of 10 times with the first few at slow speed. If brake function is adequate or improves, increase speed for the remaining tests. Before the end of the tests, both wheels should lock at approximately the same time and slide straight.

Read all of Section B and this section before attempting any procedure. Pay particular attention to Notices, Cautions, Warnings and Dangers.

NOTICE

The brake adjuster mechanism must expand and release fully to function. Under light usage this may not occur, even though the vehicle stops acceptably. The adjuster functions most consistently with aggressive braking.

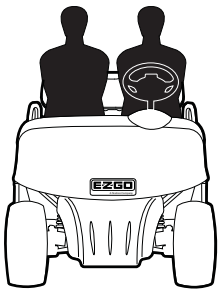

Fig. 13 Equally Load Vehicle

Wheel Brake Inspection

WARNING

Wear a dust mask and eye protection whenever working on wheel brakes. Do not use pressurized air to blow dust from brake assemblies. Replace both brake shoes on both wheels if one or more shoes are worn below.06" (1.5mm) thickness at any point.

CAUTION

Do NOT touch any of the wheel brake mechanism except as instructed.

Do NOT use a commercial brake cleaner unless the entire brake has been disassembled.

1. Remove the brake drums.
   Do not disturb adjuster mechanisms. Remove excess dust and dirt from the drum with a brush.

WARNING

The drum must not be turned to "true" a worn friction surface. Turning will make the drum too thin causing drum failure and a loss of brakes which could cause severe injury or death.

2. Inspect the brake drum.
   Look for a blue coloration or blistered paint that would indicate that it has overheated. Check for evidence of scoring. Check for excessive wear indicated by the friction surface being significantly worn and leaving a ledge of unworn drum. Inspect the splines for galling, wear and corrosion. If any of these problems are found, the drum must be replaced.
3. Remove any accumulated brake dust from the wheel brake assembly with a brush.
4. Visually inspect the axle seal for oil leakage and the condition of the thrust washer. If oil is present, see REAR AXLE section.
5. Verify the inner brake drum washer is present and check its condition. Replace if damaged or missing.

WARNING

If one wheel brake assembly requires replacement, the second must also be replaced.

CAUTION

Use care when handling the adjuster arm. Too much force will damage the adjuster and require that both wheel brake assemblies be replaced.

6. Visually check the condition and operation of the adjuster mechanism.
   Inspect the brake lever for damage or wear. Test the adjuster function as follows:
   Push the front brake shoe in the direction of the rear of the vehicle and hold in position.
   Operate the brake lever.
   Observe the brake adjuster arm and note if the arm engages the star wheel and attempts to rotate it (Ref. Fig. 14).

.

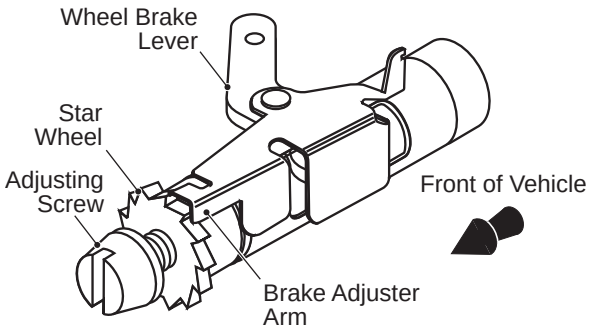

Fig. 14 Adjuster Mechanism

If the adjuster arm **engages and turns** the star wheel, proceed. If the arm **fails to engage** the star wheel, it has been damaged and both wheel brake assemblies must be replaced.

If adjuster arm engages star wheel but **fails to**

Read all of Section B and this section before attempting any procedure. Pay particular attention to Notices, Cautions, Warnings and Dangers.

rotate it, the adjuster assemblies must be replaced with new color-coded adjusters. Note the location of the two Teflon coated washers (Ref. Fig. 15).

7. Check the condition and operation of the moving anchor assembly.
   Operate the brake lever to check for free motion. The adjuster assembly and brake lever should move smoothly from front to back on the backing plate. If the moving anchor assembly is damaged or binds against the backing plate, replace both of the wheel brake assemblies.

⚠ WARNING

A backing plate assembly that shows any indication of galling or gouging is not repairable and must be replaced with a new wheel brake assembly. Always replace wheel brake assemblies in pairs.

8. Inspect the backing plate.
   Inspect for gouges, galling or other damage, particularly where the backing plate is contacted by the brake shoes and by the moving anchor assembly. Replace both backing plates if any gouges or galling is found.

9. Measure the brake shoe thickness.
   Measure at the most worn area. Brake shoe thickness must never be less than .060" (1.5 mm) at any point on the shoe. It is normal for the shoes to show more wear at the leading and trailing edges (Ref. Fig. 15). If the brake shoe thickness is approaching .060" (1.5 mm), it is recommended that the shoes be replaced. It is recommended that the brake shoe springs and brake adjusters be replaced when installing new brake shoes.

10. Inspect the brake shoe springs.
    Be sure that they are not broken or damaged and are correctly installed. The hooked end of the adjuster spring is inserted through the front of the front shoe and the opposite end hooked to the adjuster with the hook end facing out. The brake shoe springs must be installed with the light spring closest to the adjuster mechanism with the hook installed down through the rear brake shoe and up through the front brake shoe. The heavy top spring is installed with both spring hooks installed down through the brake shoes (Ref. Fig. 16).

The pattern of normal brake shoe wear is shown in quadrant 'A', 'B', 'C' & 'D' with quadrant 'A' showing the most wear. Quadrant 'B' will show the second most wear.

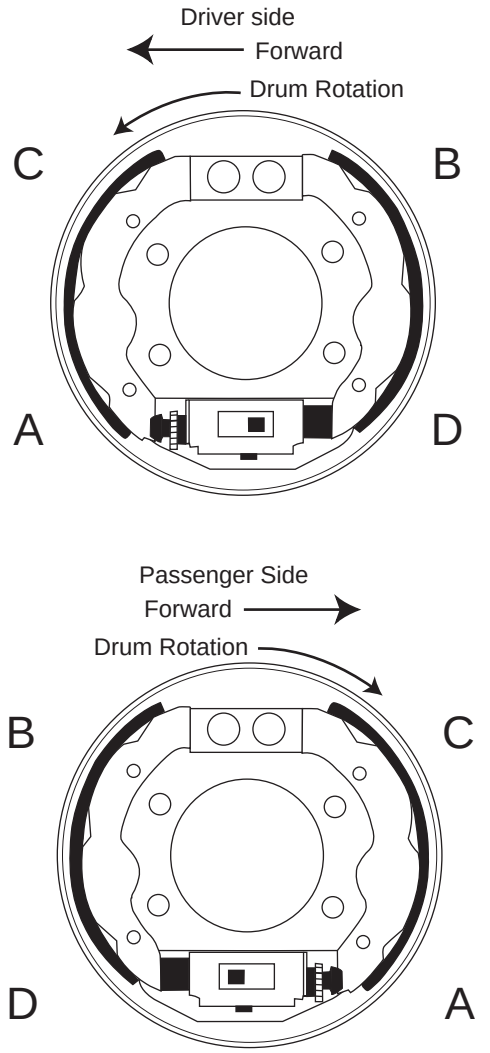

Fig. 15 Brake Shoe Wear

Read all of Section B and this section before attempting any procedure. Pay particular attention to Notices, Cautions, Warnings and Dangers.

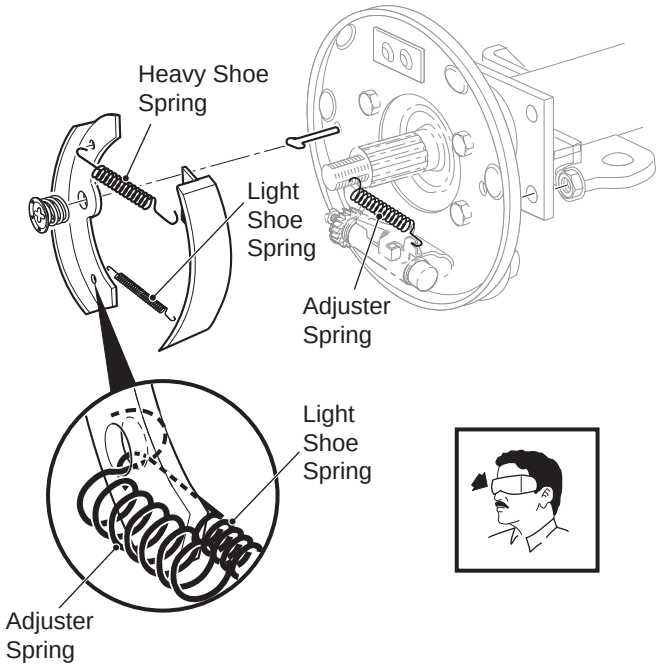

Fig. 16 Orientation of Brake Shoe Springs

11. Repeat procedure at the opposite wheel brake.
12. Check/adjust brake pedal free travel.
    Whenever the brake system is serviced or requires a parts replacement, the brake pedal free travel must be checked and adjusted. "Adjusting Brake Pedal Free Travel" on Page M - 12 This includes all linkage and wheel brake components.

MAINTENANCE AND REPAIRS

Tool List	Qty.
Hydraulic Floor Jack	1
Scale	1
Jack Stands	4
Wheel Chocks	4
Socket, 1/2"	1
Socket, 3/4"	1
Socket, 11/16"	1
Socket, 15/16"	1
Socket, 1 1/8"	1
Socket, 1/4"	1
Torque Wrench, ft. lbs.	1
Torque Wrench, in. lbs.	1
Extension, 6"	1
Ratchet	1
Open End Wrench, 1/4"	1
Open End Wrench, 1/2"	1
Open End Wrench, 5/8"	1
Straight Blade Screwdriver	1
Straight Blade Screwdriver, Narrow	1
Pliers	1
Vernier/Dial Calipers	1
Plastic Tipped Hammer	1
Puller (P/N 15947-G1)	1
Pry Bar	1
Dust Mask	1
Emery Cloth	1

Parts Replacement vs. Repair

Some maintenance or repair tasks can take considerable labor to do correctly. Assessment of the condition of worn components is critical to the operation of the brake system. In some cases, component replacement may be more cost effective than the removal, cleaning, inspection and reassembly of the component(s).

Adjusting Brake Pedal Free Travel

CAUTION

Brake pedal free travel MUST be checked and adjusted any time that the brake system is serviced or when parts are replaced.

Brake pedal free travel is the distance the pedal travels from rest to the point at which the brake cables start to move the brake levers. This should not be confused with the light resistance that is felt as the brake pedal is depressed enough to remove slack from the compensator and cables. Correct adjustment of free travel is essential to proper brake function. Too much pedal free travel will limit braking capability. Too little pedal free travel may cause the brakes to drag (not fully released). Either condition can prevent the brakes from adjusting properly.

This procedure is intended to adjust the brakes and seat brake system components. The brake system may not be effective for the first few applications of the brake pedal.

Pre-adjust service brake pedal free travel to the correct setting by loosening the jam nut and adjusting the spherical nut (Ref. Fig. 17). Tighten the jam nut to 10 - 11 ft. lbs. (14 - 15 Nm).

Read all of Section B and this section before attempting any procedure. Pay particular attention to Notices, Cautions, Warnings and Dangers.

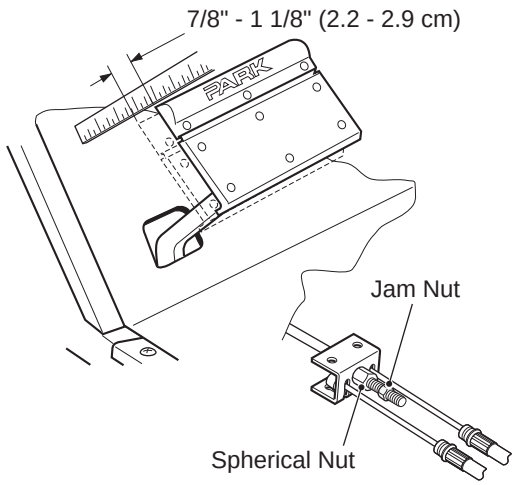

Fig. 17 Free Travel Adjustment

The correct brake pedal free travel should be set to 7/8" - 1 1/8" (2.2 - 2.9 cm).

Press the brake pedal aggressively 4 - 6 times to establish known free travel.

WARNING

All brake tests must be done in a safe location with regard for the safety of all personnel.

In a safe location free from people and vehicles, drive the vehicle at reduced speed and apply the brakes aggressively. As the brakes adjust and stop the vehicle effectively, start driving at maximum speed and brake aggressively 10 times.

At the spherical nut, adjust the free travel as noted above.

Drive again and brake aggressively 10 times.

Repeat the previous steps until the pedal free travel does not change during the aggressive braking.

Check to see that the clevis pins attaching the brake cables to the brake levers are loose. If they are not loose, inspect system again and correct as required. if the clevis pins are loose, tighten jam nut to 10 - 11 ft. lbs. (14 - 15 Nm) at the spherical nut.

The parking brake latching force can be checked as verification after setting brake pedal free travel. To check parking brake latching force, place a 'bathroom' scale on the service and parking brake pedals. Using both feet press the scale down against the parking brake pedal until it latches. The parking brake should latch between 65 and 75 lbs. (29 - 34 kg) indicated on the scale.

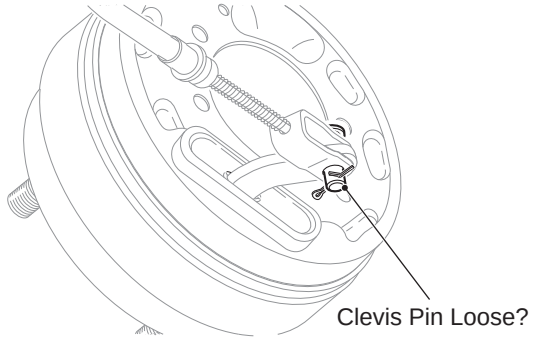

Fig. 18 Check Clevis Pins.

Perform the Periodic Brake Performance Test as described and return the vehicle to service if brake performance is satisfactory.

Brake Drum Removal and Installation

Remove the dust cap (1) to gain access to the castellated nut (2) and the cotter pin (3). Brake Assembly

Remove the cotter pin and castellated nut as shown.

NOTICE

Do not apply the brake when removing the nut as the shoes may not fully retract preventing removal of the brake drum.

Remove washer (4).

Slide the brake drum (5) from the axle shaft. If required, tap the drum with a plastic faced hammer to loosen it from the axle shaft or use drum puller (P/N 15947-G1).

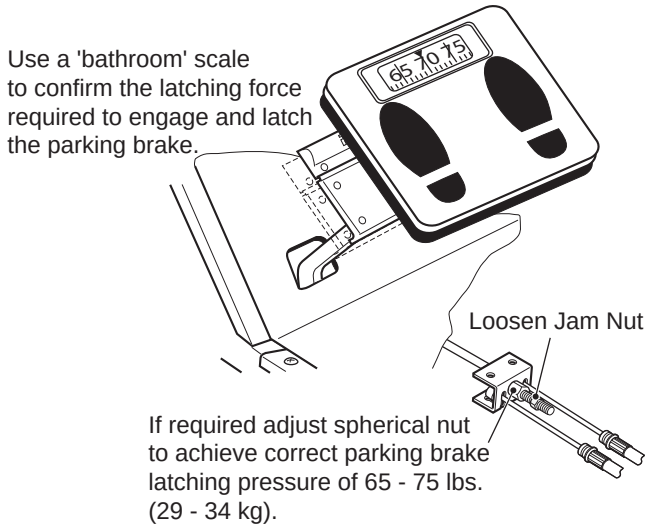

Fig. 19 Checking Parking Brake Latching Pressure

Read all of Section B and this section before attempting any procedure. Pay particular attention to Notices, Cautions, Warnings and Dangers.

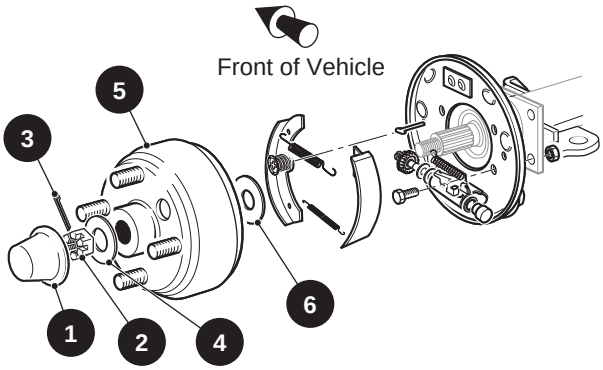

Fig. 20 Brake Assembly

CAUTION

Use care when raising the adjuster arm. Too much force will damage the adjuster and require that both wheel brake assemblies be replaced.

If the drum does not slide from the brake assembly, the brake shoes must be retracted. Rotate the hub so that the hole in the drum is in the six o'clock position which is directly over the brake mechanism. Use a small straight blade screwdriver to raise the adjuster arm **just above** the star wheel.

Loosen the star wheel to retract the brake shoes and remove the brake drum.

NOTICE

Pay particular attention to the location of the inner brake drum washer (6) inside the brake drum, which may be on the axle shaft or attached to the rear of the drum hub. This washer must be reinstalled when the brake is reassembled.

To install the brake drum, clean the axle shaft and the splines on the brake drum to remove dirt, grease and foreign matter. Apply a small amount of anti-seize compound to the axle spline. Install the inner brake drum washer (6) and slide the brake drum (5) into place. Check to ensure the nose of drum hub is beyond the end of the axle splines. If not, remove drum and install one additional inner brake drum washer (total of 2) to obtain required spacing.

CAUTION

Do not back off nut to install cotter pin.

Install the remaining hardware and tighten the nut to 80-90 ft. lbs. (108 - 122 Nm) torque. Continue to tighten until a new cotter pin can be installed through the castellated nut and the hole in the axle. Maximum torque is 140 ft. lbs. (190 Nm).

Wheel Brake Service

Wheel brake service consists of disassembly, cleaning, inspection, lubrication and re-assembly of the wheel brake. Worn or damaged components must be replaced. Wheel brake service is required periodically as a preventive maintenance measure (see Periodic Service Schedule in Section A). The wear rate of brake shoes and required service intervals will vary based on usage, terrain and other conditions. It is recommended that wheel brake service be performed periodically on a sample of vehicles within the service fleet to establish the most efficient and effective service interval.

Remove the brake drum as described in 'Brake Drum Removal and Installation.

WARNING

Wear eye protection and a mask when cleaning brake components. Do not use compressed air to remove brake dust from brake assembly.

CAUTION

Do NOT use a commercial brake cleaner unless the entire brake has been disassembled.

Remove any accumulated brake dust with a brush.

Remove the brake shoes."Brake Shoe and Adjuster Replacement" on Page M - 15.

Clean backing plate with a commercial brake cleaner. Allow to dry completely.

CAUTION

It is important that the friction areas between the backing plate and the brake shoes be lubricated. Be careful not to allow lubricant to contact the braking portion of the brake shoes or the friction surface of the brake drum. Use only recommended lubricants.

Read all of Section B and this section before attempting any procedure. Pay particular attention to Notices, Cautions, Warnings and Dangers.

Lubricate the backing plate friction points of the shoes and moving anchor with Multi Purpose Grease (MPG) lubricant (Ref. Fig. 21).

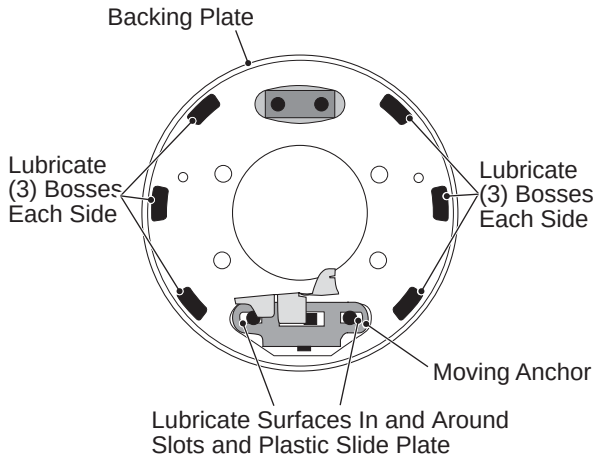

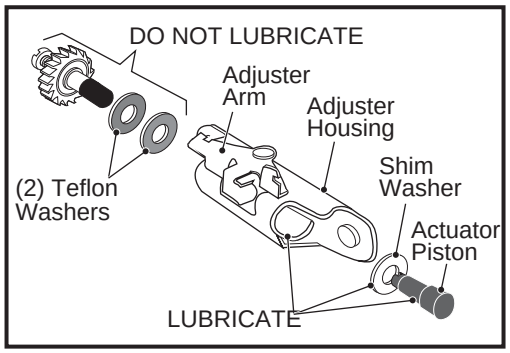

Fig. 21 Wheel Brake Lubrication Points

Install the actuator components, adjuster components and brake shoes. “Brake Shoe and Adjuster Replacement” on Page M - 15 If the brake shoes and drum are not to be replaced, sand the friction surfaces lightly with emery cloth to remove any foreign material.

⚠ CAUTION

Be sure that the adjusting screw is screwed into the star wheel nut until only 1 - 2 threads are exposed (Ref.). If the brake shoes are replaced, replace the three brake springs and the adjuster components.

Replace the springs one side at a time, using the other side as a guide.

Install brake drum as described in ‘Brake Drum Removal and Installation’.

Repeat on other side of vehicle.

Adjust the brake pedal free travel.

Backing Plate/Entire Wheel Brake Assembly Removal and Installation

Remove the four bolts (1) and lock nuts (2) securing the wheel brake backing plate to the flange (3) on the axle tube (Ref. Fig. 22).

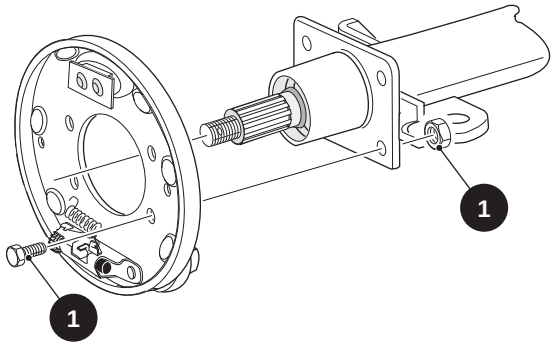

Fig. 22 Backing Plate Removal and Installation

Remove the clevis pin securing the brake cable to the brake lever.

Installation is the reverse of removal. Connect the brake cable to the wheel brake with the clevis pin installed from the top down and a new cotter pin. Install the brake assembly or backing plate to the axle tube flange. Install new hardware (locknut should only be used once) and tighten to 23 - 28 ft. lbs. (31 - 38 Nm) torque.

NOTICE

Brake Shoe and Adjuster Replacement

It is recommended that when brake shoes are replaced, the adjusters and springs also be replaced. It is good practice to do one side at a time, using the other side for reference.

Remove the three brake shoe springs and discard (1, 2, 3). Note the location of the heavy spring and the adjuster spring (Ref.). Hold the shoe clamp pin (4) and compress and rotate the shoe clamp (5) 90° to release it from the shoe clamp pin. Remove the brake shoes, adjuster and remaining components.

Clean the backing plate with a commercial brake cleaner. Allow to dry completely. Lubricate the friction points of the shoes and moving anchor with Multi Purpose Grease (MPG) lubricant (Ref. Fig. 21).

Read all of Section B and this section before attempting any procedure. Pay particular attention to Notices, Cautions, Warnings and Dangers.

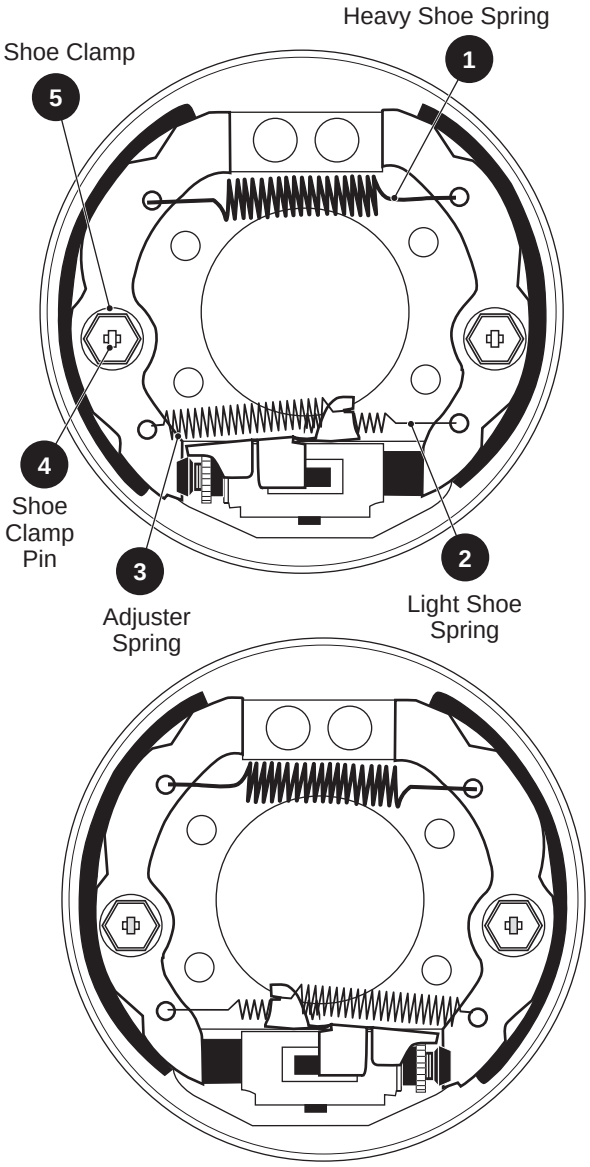

Fig. 23 Brake Shoes and Springs

CAUTION

Be sure that the adjusting screw is screwed into the star wheel nut until only 1 - 2 threads are exposed.

Install adjuster mechanism (driver side silver, passenger side gold). Be sure that the two teflon coated washers are installed as shown (Ref. Fig. 21). The adjusting screw must be screwed into the star wheel nut until only 1 - 2 threads are exposed (Ref.).

Install the actuator piston. Be sure the hardened shim washer is installed as shown (Ref. Fig. 21).

Always replace both brake shoes on both wheels as a set. Install the shoes as indicated and install the shoe clamp (5) over the shoe clamp pin (4) and rotate 90° to lock them in place (Ref.).

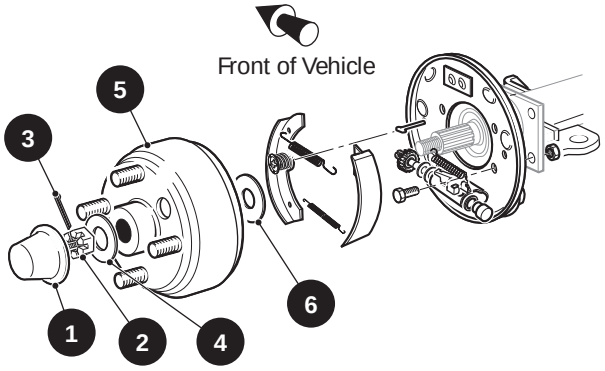

Fig. 24 Setting Adjuster Screw

Install new brake shoe and adjuster springs. The hooked end of the adjuster spring is inserted through the front of the front shoe as shown(Ref.). The opposite end of the adjuster spring is hooked to the adjuster with the hook end facing out. The brake shoe springs must be installed with the light spring closest to the adjuster mechanism with the hook installed down through the rear brake shoe and up through the front brake shoe. The heavy top spring is installed with both spring hooks installed down through the brake shoes. Check to see that the brake is functioning properly.

Install the brake drum. “Brake Drum Removal and Installation” on Page M - 13.

Repeat on other side of vehicle.

Adjust the brake pedal free travel. “Adjusting Brake Pedal Free Travel” on Page M - 12.

Brake Cable and Equalizer Assembly Removal and Installation

NOTICE

The brake cables and equalizer are only serviceable as a complete assembly.

Remove the cotter pins and clevis pins connecting the brake cables to the brake levers. Remove the retaining rings connecting the brake cables to their brackets at the axle (rear of cable) and at the frame (front of cable). Loosen and remove the jam nut and the spherical nut on the equalizer link (Ref. Fig. 25). Inspect the hardware and

Read all of Section B and this section before attempting any procedure. Pay particular attention to Notices, Cautions, Warnings and Dangers.

replace if needed. Remove the brake cable and equalizer assembly and discard.

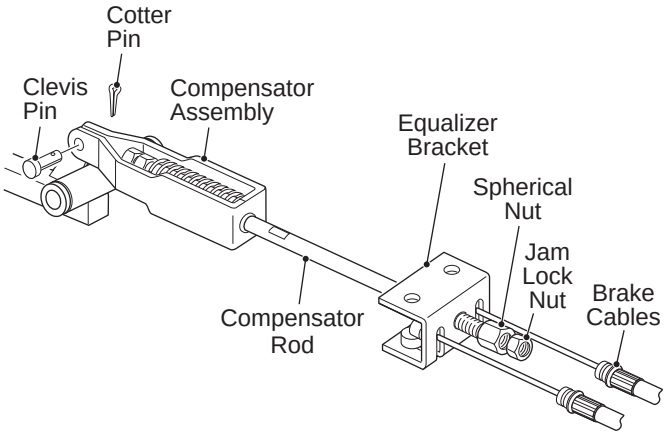

Fig. 25 Brake Cable, Equalizer and Compensator

Slide the equalizer link of the new assembly over the compensator rod. Loosely install the spherical nut and new locking jam nut. Insert the cables into the frame and axle brackets. Install new retaining rings. Connect the cables to the brake levers using new clevis pins and new cotter pins.

Adjust the brake pedal free travel. See "Adjusting Brake Pedal Free Travel" on Page M - 12.

Compensator Assembly, Removal and Installation

Disconnect the compensator assembly from the brake pedal by removing the cotter pin and clevis pin (Ref. Fig. 25).

Loosen and remove the jam nut and the spherical nut connecting the compensator rod to the equalizer link. Remove the compensator assembly.

Installation is the reverse of removal. Use new cotter pins in the clevis pin.

Adjust the brake pedal free travel."Adjusting Brake Pedal Free Travel" on Page M - 12.

Brake Pedal Removal and Installation

Disconnect the compensator assembly (1) from the brake pedal by removing the cotter pin (2) and the clevis pin (3). Unplug the wiring harness on models equipped with brake lights. Unhook the torsion spring (4) by inserting a thin blade screwdriver between the small hook and the bracket. Move the hook back and to the side to release the torsion spring(Ref. Fig. 26).

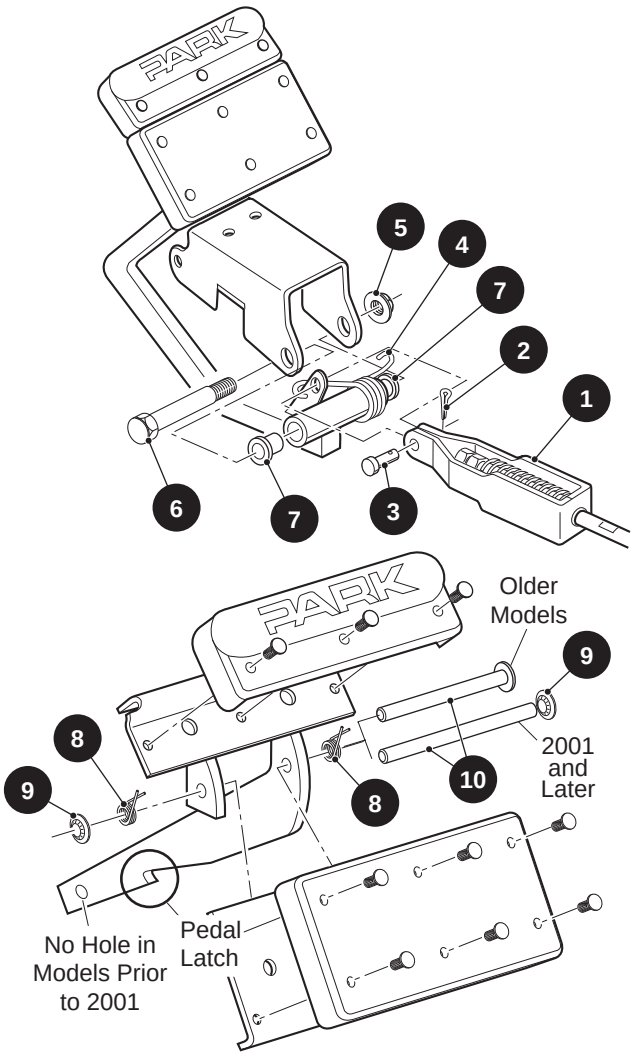

Fig. 26 Brake Pedal Removal and Installation.

Remove the lock nut (5), the shoulder bolt (6) and remove the brake pedal.

Inspect the shoulder bolt for corrosion that could cause binding. This bolt and both bushings (7) must be replaced with new ones if corrosion or wear is found.

Brake pedal installation is in the reverse order of disassembly. Tighten the nut (5) to 25 - 29 ft. lbs. (34 - 39 Nm) torque and use a new cotter pin when installing the compensator assembly. Connect brake light wiring harness, if equipped.

Adjust the brake pedal free travel. "Adjusting Brake Pedal Free Travel" on Page M - 12.

Check for proper brake light operation if equipped.

Read all of Section B and this section before attempting any procedure. Pay particular attention to Notices, Cautions, Warnings and Dangers.

Parking Brake Catch Bracket Removal and Installation

Remove the driver side front wheel to gain access to the brake pedal release mechanism.

WARNING

To prevent serious injury or death resulting from the sue of worn parking brake components, do not attempt to re-new worn components. The catch bracket is a hardened part. Do not grind or file it as doing so will cause the part to lose its hardness characteristics. A new part must be used.

Remove the two bolts (1) and nuts (2) which secure the catch bracket. Replace the catch bracket with a new one, replace and tighten the hardware to 85 - 95 in. lbs. (10 - 11 Nm) torque (Ref. Fig. 27).

If required, adjust the kick-off cam (3).

Install wheel. See WHEELS AND TIRES section

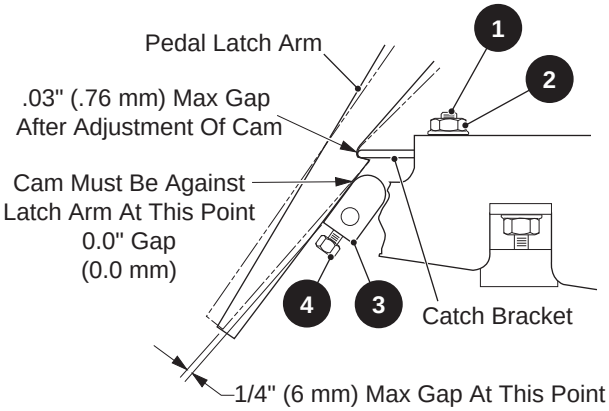

Fig. 27 Catch Bracket and Latch Arm

Parking Brake Pedal, Removal and Installation

Note the location and orientation of the two torsion springs (8). Remove the push nut (9) and pin (10) (Ref. Fig. 26) and remove the parking brake pedal. Some models may use two push nuts on the pin.

WARNING

To prevent serious injury or death resulting from the use of worn parking brake components, do not attempt to re-new worn components. The parking brake arm latch is a hardened part. Do not grind or file it as doing so will cause the part to lose its hardness characteristics. A new part must be used.

Installation is in the reverse order of disassembly. Use a new push nut (or push nuts).

If required, adjust the kick-off cam (3)See If required, adjust the kick-off cam (6). on 18.

Pedal Bumper Adjustment

Loosen the bumper lock nut and adjust the bumper by rotating it (Ref. Fig. 28). The brake pedal must contact the pedal bumper when pedal is released and the dimension from the top of the pedal arm to the setscrew heads in the kick-off cam should be approximately 1/4" - 3/8" (6 - 9.5 mm).

Tighten the lock nut to 12 - 14 ft. lbs. (16 - 19 Nm).

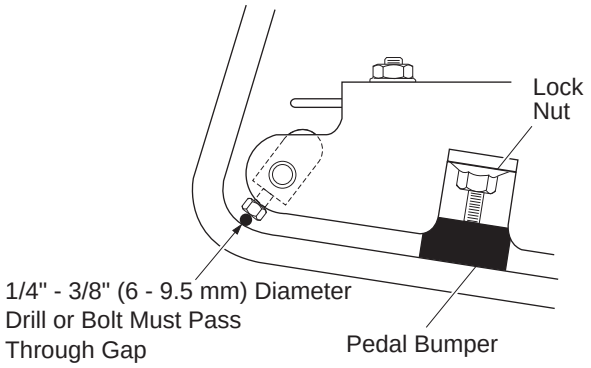

Fig. 28 Pedal Bumper Adjustment

Parking Brake Release Linkage Removal and Replacement

Remove the cotter pin (2), washers (3) and bushings (4) from linkage rod (1). Remove the linkage rod (Ref.).

Inspect the bushings (4). If they are worn replace them with new ones.

Installation is in the reverse order of disassembly.

If required, adjust the kick-off cam (6).

Parking Brake Kick-Off Cam Removal, Replacement and Installation

Disconnect the parking brake release linkage as described above. Loosen the two setscrews (5) from the cam (6) and remove the cam pivot (7), cam and spacer (8) (Ref.).

Read all of Section B and this section before attempting any procedure. Pay particular attention to Notices, Cautions, Warnings and Dangers.

Inspect the bushings (9,10) and spacer. If they are worn, replace them with new ones.

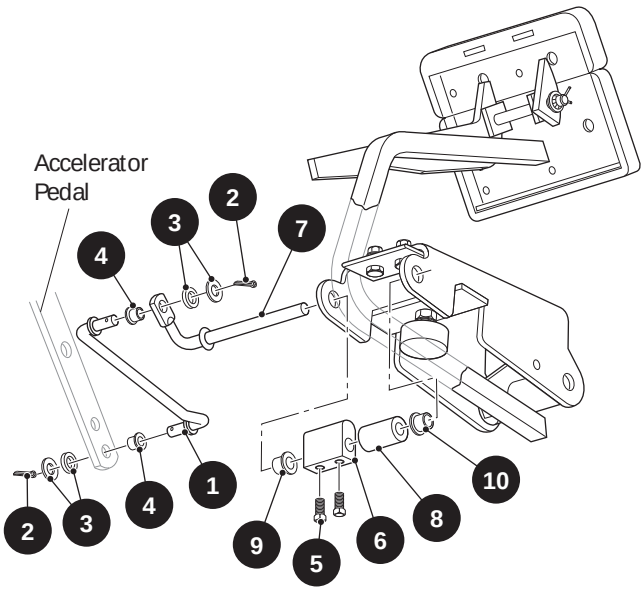

Fig. 29 Parking Brake Release Linkage and Kick-Off Cam Removal and Installation.

Installation is in the reverse order of disassembly.

With the parking brake engaged and fully latched, there mus be no gap between the top of the cam and the latch arm. To adjust the kick-off cam (6), engage the parking brake and loosen the two cam setscrews (5) and rotate the cam until it contact the latch arm. Tighten the setscrews to 45 - 55 in. lbs. (5 - 6 Nm) torque. Always use new epoxy patch setscrews when replacing the kick-off cam.

Read all of Section B and this section before attempting any procedure. Pay particular attention to Notices, Cautions, Warnings and Dangers.

NOTES:

TABLE OF CONTENTS FOR SECTION 'N'

SECTION TITLE **PAGE NO.**

SYSTEM DESCRIPTION ..... **N - 1**

MASTER CYLINDER REPLACEMENT ..... **N - 1**

BRAKE MASTER CYLINDER FLUID ..... **N - 1**
Check Brake Fluid ..... N - 1

ROUTINE MAINTENANCE ..... **N - 2**

REPLACEMENT OF WEAR ITEMS ..... **N - 2**
Brake Pad Replacement ..... N - 2
Rotor Replacement ..... N - 2
Spindle Replacement ..... N - 2
Actuator Linkage Bushings ..... N - 2
Actuator Pivot Bushings ..... N - 2

BLEEDING BRAKES ..... **N - 3**

LIST OF ILLUSTRATIONS

Fig. 1 Master Cylinder Replacement ..... N - 1
Fig. 2 Bleeding Brakes ..... N - 3

Read all of Section B and this section before attempting any procedure. Pay particular attention to Notices, Cautions, Warnings and Dangers

NOTES:

Read all of Section B and this section before attempting any procedure. Pay particular attention to Notices, Cautions, Warnings and Dangers.

SYSTEM DESCRIPTION

NOTICE

To assure correct braking performance, all periodic maintenance, inspections and procedures must be performed as indicated in the Periodic Service Schedule in Section 'A' of this manual. The brake system must be bled whenever **any part of the brake system** has been replaced.

A hydraulic system is used to actuate the front brakes. The system transmits the power required to activate the friction surfaces (pads) of the braking system from the pedal to the individual disc brake hubs at each wheel.

The front hydraulic brake system is designed to operate only after significant rear brake pressure has been applied. This is accomplished by activating the master cylinder after the brake pedal has reached the parking brake latch position. The lower actuator pivot is connected to the brake pedal by a linkage rod which rotates to contact the upper actuator pivot. The upper actuator pivot is connected to a clevis of the master cylinder plunger. Movement of the plunger hydraulically activates the caliper pistons forcing the brake pads against the rotors. With the brake pedal released, the upper actuator pivot and the plunger returns to the 'at rest' position. With the master cylinder no longer applying hydraulic pressure to the brake pistons, the piston seals retract the pistons permitting the brake pads to float freely against their guide pins while removing all pressure against the rotors.

MASTER CYLINDER REPLACEMENT

⚠ CAUTION

During this process, it is likely that brake fluid will leak from the master cylinder. Avoid allowing brake fluid to contact the painted body components of the vehicle. Wipe off immediately.

Removing the front shield may improve access (See BODY).

To remove the master cylinder:

Remove the bolts securing the brake actuator assembly housing cover and remove cover. The clevis pin joining the brake cylinder clevis and the upper actuator pivot must be removed by removing the cotter pin and discarding. Remove clevis pin (Ref. Fig. 1).

Remove the braided brake line from the master cylinder and allow brake fluid to drain into a container. **Do not reuse old brake fluid.** Remove the two nuts, bolts and washers securing the master cylinder to the brake actuator assembly housing. Install new master cylinder, and tighten nuts to 12 - 14 ft. lbs (16.2 - 18.9 Nm) torque. Install brake line to new master cylinder and tighten to 15 in. lbs. (1.6 Nm) torque.

Latch the brake pedal. Rotate and hold the upper actuator pivot against the lower actuator pivot. (Rotate and hold the upper actuator pivot such that the rectangular stop tab contacts the lower actuator pivot stop tab.) Adjust master cylinder clevis until the clevis pin passes through the upper actuator pivot and the master cylinder clevis. Tighten jam nut against master cylinder clevis. Install a new cotter pin. Bleed hydraulic system.

Add clean fresh DOT 3 brake fluid into reservoir and bleed system per 'BLEEDING BRAKES'

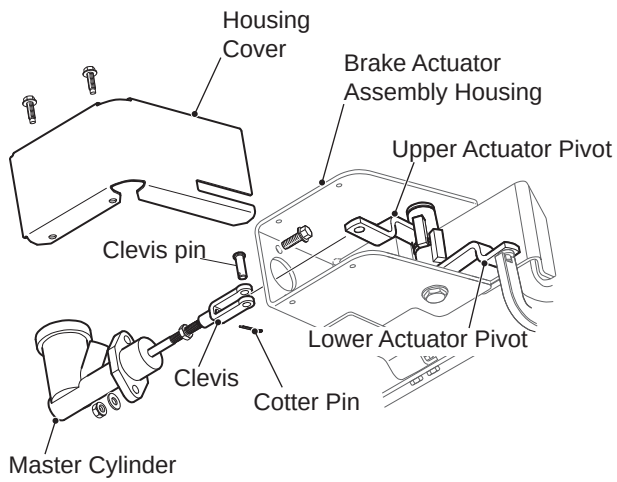

Fig. 1 Master Cylinder Replacement.

BRAKE MASTER CYLINDER FLUID

NOTICE

Hydraulic brake systems must be totally flushed if the fluid becomes contaminated with water, dirt or other corrosive chemicals. To flush, bleed the entire system until all brake fluid has been replaced with fresh DOT 3 standard automotive brake fluid.

Check Brake Fluid

The brake fluid should be checked at regular intervals (as specified in the Periodic Service Schedule) or immediately if fluid leaks are found. The easiest way to check fluid level is to clean the cap with a shop rag and remove

Read all of Section B and this section before attempting any procedure. Pay particular attention to Notices, Cautions, Warnings and Dangers.

the cap. Check fluid level using a mechanics mirror and a flashlight. Add fluid if the level has fallen below 1/4" from the top of the reservoir and inspect for visible fluid leaks.

ROUTINE MAINTENANCE

Tool List	Qty.
Shop Rag	A/R
Mechanics Mirror	1
Flashlight	1
Transmission Fluid Funnel	1
Torque Wrench ft. lbs	1
Torque Wrench in. lbs.	1
Crows Foot 9/16"	1
Open end Wrenches 3/8", 1/2", 5/8", 9/16"	1
Needle Nose Pliers	1
Ratchet	1
Sockets 3/8", 1/2", 5/8", 9/16"	1
Micrometer/Vernier Caliper	1
2" C Clamp	1
Floor Jack	1
Jack Stands	1
Ball Joint Separator	1
Lug Wrench, 3/4"	1
Jack	1
Jack stands	4
Brake adjusting tool	1
Plastic faced hammer	1

WARNING

Never work on a vehicle supported by a jack alone. To prevent possible personal injury, the vehicle must be supported on jack stands during this procedure.

REPLACEMENT OF WEAR ITEMS

Brake Pad Replacement

Brake pads should always be replaced as a full set of four pads. To remove the brake pads, raise the vehicle per 'Lifting the Vehicle' in the SAFETY section. Loosen both of the bolts securing the caliper to the spindle but only remove one. Swing the caliper free from the rotor. Push out the two guide/retainer pins from the caliper and remove the pads, being careful to note the orientation of the brake pads. Install a new set of pads. If the pads have been correctly oriented, the guide pins will easily engage. Re-insert the guide/retainer pins, being sure that they are correctly seated in the grooves machined in the caliper casting. Gently push the pads away from each other to provide adequate clearance with the rotor and then swing the entire caliper and pad assembly back over the rotor. Secure the caliper to the spindle and tighten both bolts to 25 - 30 ft. lbs (33.8 - 40.6 Nm) torque. NOTE: Unless fluid is lost or a brake line is disconnected, there is no need to bleed the system.

Rotor Replacement

NOTICE

The rotor (disc brake hub) is not designed to be trued ("turned").

If the rotor has deep grooves or gouges, it must be replaced. If the pad contact area has worn the rotor to .120" or less, the rotor must be replaced.

If the rotor must be replaced (or serviced), the caliper and pads must be swung out of the way to gain access to the rotor (See Brake Pad Replacement).

The disc hub (rotor) can be serviced in the same manner as the hub on non-front disc brake equipped vehicles.

For Hub Replacement, Wheel Bearing and Race Replacement, Wheel Bearing Packing and Wheel Bearing Adjustment procedures, see FRONT SUSPENSION AND STEERING.

Spindle Replacement

See FRONT SUSPENSION AND STEERING.

Actuator Linkage Bushings

Removing the front shield may improve access (See BODY)

The actuator linkage is connected to the lower actuator pivot with a flat washer and cotter pin. Remove and discard the cotter pin and remove the washer. A new nylon bushing may be installed (flange down) to the lower actuator pivot and the actuator linkage reinstalled using a new cotter pin. The actuator linkage is connected to the brake pedal arm with a flat washer and cotter pin. Remove and discard the cotter pin and remove the washer. A new nylon bushing may be installed (with the flange between the actuator linkage and the brake pedal arm) to the lower actuator pivot and the actuator linkage reinstalled using a new cotter pin.

Actuator Pivot Bushings

Removing the front shield may improve access (See BODY).

Both the upper and lower actuator pivots contain an acetal flanged bushing at either end of the actuator and are

Read all of Section B and this section before attempting any procedure. Pay particular attention to Notices, Cautions, Warnings and Dangers.

unlikely to require replacement. The upper actuator pivot also is fitted with a nylon bushing between it and the brake cylinder clevis. To replace any of these bushings, the actuator linkage must be removed from the lower actuator pivot and the linkage rod (See Actuator linkage bushings).

The clevis pin joining the brake cylinder clevis and the upper actuator pivot must be removed by removing the cotter pin and discarding. Remove clevis pin.

Remove Locknut from shoulder bolt and remove shoulder bolt. Pivot components may now be removed and bushing removed and replaced with new ones. Be sure to replace the nylon bushing with the flange oriented up.

Reassemble using new cotter pins. and tighten lock nut to 5 - 10 ft. lbs (6.7 - 13.5 Nm) torque.

BLEEDING BRAKES

Tool List	Qty.
Hose	A/R
Clean Container	1
Brake Fluid, DOT 3	A/R
Wrench, 1/4" box end	1

The hydraulic brake system must be free of air to operate properly. Air can enter the system when hydraulic parts are disconnected for servicing or replacement, or when the fluid level in the master cylinder reservoir is very low. Air in the system will give the brake pedal a spongy feeling upon application.

NOTICE

An assistant will be necessary to perform this procedure.

Use a clean cloth to wipe off the master cylinder reservoir and wheel cylinder bleeder valves (Ref. Fig. 1). Clean each fitting before opening to prevent contaminating the system. Open the master cylinder reservoir and top off with standard automotive DOT 3 brake fluid.

⚠ WARNING

Never reuse any excess fluid or return to the original container. Dispose of brake fluid properly.

Brake fluid should never be returned to the original container and reused due to the possibility of contamination by dirt, grease, moisture or used brake fluid which could cause failure of the braking system. Dispose of in accordance with Federal, state and local codes.

Attach a short length of clear hose to the caliper bleed valve and insert the other end into a suitable clean container containing fresh, clean brake fluid (Ref. Fig. 1). Check the fluid level in the master cylinder frequently during this operation to prevent air from entering the lines.

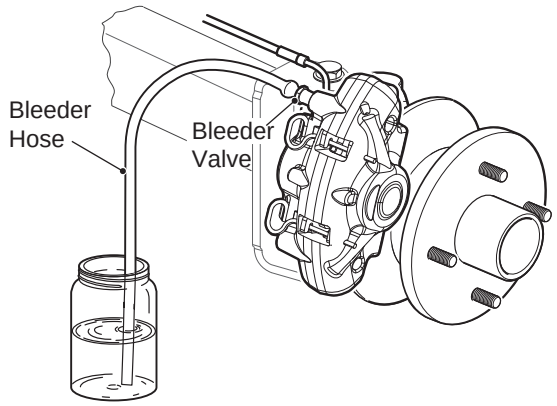

Fig. 2 Bleeding Brakes

Starting with the passenger side rear brake and going to the driver side rear brake, bleed the brakes using the following procedure:

NOTICE

The bleeder valve at the caliper must be closed at the end of each stroke and before the brake pedal is released to insure that air cannot enter the system. It is also important that the brake pedal be returned to full ‘up’ position.

Open the bleeder valve and have an assistant depress brake pedal **gently** until fluid flows into container. Close the bleeder valve and have the assistant slowly release the brake pedal. Repeat the process until no bubbles can be seen leaving the bleeder valve. Close the valve and repeat at other side. After bleeding, check fluid level using a mechanics mirror and a flashlight. Add fluid if the level has fallen below 1/4” from the top of the reservoir and inspect for visible fluid leaks.

Read all of Section B and this section before attempting any procedure. Pay particular attention to Notices, Cautions, Warnings and Dangers.

NOTES:

TABLE OF CONTENTS FOR SECTION 'P'

SECTION TITLE **PAGE NO.**

GENERAL ..... **P - 1**

MASTER CYLINDER REPLACEMENT ..... **P - 3**

BRAKE LINKAGE ..... **P - 4**

BRAKE DRUM REMOVAL AND INSTALLATION ..... **P - 5**

WHEEL BRAKE SERVICE ..... **P - 7**

BRAKE MASTER CYLINDER FLUID ..... **P - 1**
- Check Brake Fluid ..... P - 1

ROUTINE MAINTENANCE ..... **P - 8**

REPLACEMENT OF WEAR ITEMS ..... **P - 8**
- Brake Pad Replacement ..... P - 8
- Spindle Replacement ..... P - 8
- Actuator Linkage Bushings ..... P - 8

BLEEDING BRAKES ..... **P - 9**

PARKING BRAKE ..... **P - 10**
- Lubrication ..... P - 10
- Adjustment ..... P - 10
- Cable Replacement ..... P - 10

LIST OF ILLUSTRATIONS

Fig. 1 Hydraulic brake System Components ..... P - 1
Fig. 2 Replacing master Cylinder ..... P - 3
Fig. 3 Brake Pedal Bumper Adjustment ..... P - 4
Fig. 4 Linkage Adjustment ..... P - 5
Fig. 5 Wheel Brake Components ..... P - 6
Fig. 6 Bleeder Valve ..... P - 9
Fig. 7 Parking Brake System Components ..... P - 11

Read all of Section B and this section before attempting any procedure. Pay particular attention to Notices, Cautions, Warnings and Dangers

NOTES:

Read all of Section B and this section before attempting any procedure. Pay particular attention to Notices, Cautions, Warnings and Dangers.

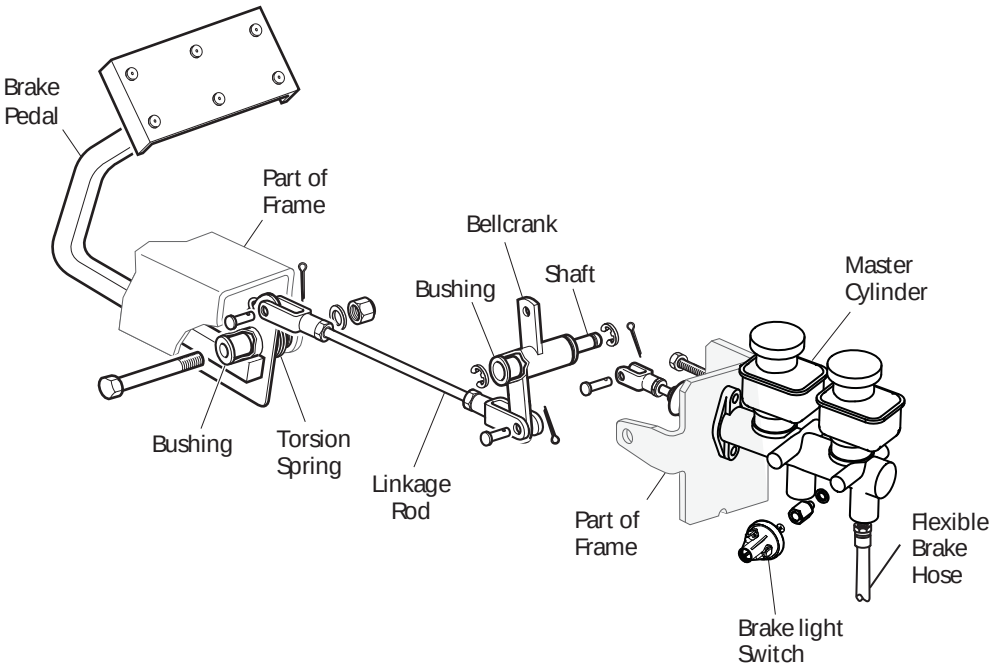

Fig. 1 Hydraulic Brake system Components

GENERAL

System Description

NOTICE

To assure correct braking performance, all periodic maintenance, inspections and procedures must be performed as indicated in the Periodic Service Schedule. The brake system must be bled whenever any part of the brake system has been replaced.

A hydraulic system is used to actuate the front disc brakes and the rear drum brakes. The system transmits the power Required to activate the friction surfaces (pads and shoes) of the braking system from the pedal to the individual wheels.

Wheel Brake

The 160 x 30mm hydraulic brake is a leading-trailing design. The shoes are held to the backing plate by hold-down springs, pins, and spring retainers. The shoes are fitted to the anchor at the bottom and secured by a lower shoe to shoe spring. At the top, the shoe web rests on the wheel cylinder piston. The shoes are held to the wheel cylinder pistons by the upper shoe to shoe spring.

The wheel cylinders are of the double piston design, permitting even distribution of force to each shoe. There are no links. Shoes rest directly on the piston ends. Wheel cylinders incorporate external boots.

Brake adjustment is automatic. Adjustment takes place, if needed, whenever the brakes are applied, whether during a forward or reverse stop or when the vehicle is stationary. Upon any brake application, the shoes move outward contacting the drum. As the shoes move outward, the automatic adjuster levers (attached to each shoe by a pin) follow the shoe movement. The automatic adjuster pin is smaller than the slot in the brake shoe web; therefore, when the brakes are released, the shoes are allowed to return slightly, providing brake shoe to drum running clearance.

The rear brake includes a parking feature consisting of a lever and strut. The lever is applied by a cable attached to the parking brake lever (hand operated). The parking brake is used to retain the vehicle when stationary. It may also be used as an emergency brake in the event of hydraulic system failure.

Read all of Section B and this section before attempting any procedure. Pay particular attention to Notices, Cautions, Warnings and Dangers.

MAINTENANCE

Daily Brake Performance Test

NOTICE

To assure correct braking performance, all periodic maintenance, inspections and procedures must be performed as indicated in the Periodic Service Schedule in Section A of this manual. **It is important that a Daily Brake Performance Test be performed and the entire brake system be serviced in accordance with the Periodic Service Schedule.**
The brake system must be bled whenever **any part of the brake system** has been replaced.

Depress brake pedal. The pedal should have some free play and then become hard. A brake pedal that has no free travel, excessive free travel or a spongy feel indicates a brake inspection is required. A brake pedal that falls after it is applied indicates a leak in the master or wheel cylinders. Check brake fluid level. Adjust brakes if required and inspect system for fluid leaks.

Brake System Inspection

Brake failure usually occurs as either a gradual decrease in braking effect from the shoe material being worn away, a loss of braking at one wheel or a sudden and complete failure with no brakes working except the parking brake.

Inspect front and rear brakes for signs of fluid leakage.Inspect rear brake shoes and front disc pads for wear.

NOTICE

Care should be taken to prevent brake fluid from coming into contact with the brake shoes. If the brake shoes should become wet with hydraulic fluid, remove the brake drum and wipe the brake shoes and drum until they are dry.

Complete brake failure usually indicates a loss of hydraulic fluid pressure.

The hydraulic system may be checked for leaks by applying pressure to the pedal gradually and steadily. If the pedal sinks very slowly to the floor, the system has a leak. This is not to be confused with a springy or spongy feel due to the compression of air within the lines.

Check for leaks along all lines and at brake assembly. If no external leaks are apparent, the problem is inside the master cylinder.

⚠ CAUTION

Do not allow brake fluid to contact painted surfaces. Wipe off immediately.

After making any repairs to hydraulic lines, wheel cylinders or master cylinder, the brakes must be bled to remove any trapped air. A bleeder valve is located at each wheel cylinder for this purpose.

To assure correct braking performance, all periodic maintenance, inspections and procedures must be performed as indicated in the Periodic Service Schedule in Section ‘A’ of this manual. The brake system must be bled whenever **any part of the brake system** has been replaced.

MASTER CYLINDER

Just like any other brake part, the master cylinder will eventually require replacement. The usual reason for a master cylinder failure is the cylinder seals (cups) deteriorate. Fluid leaks past the cups and shows as an external leak. A common symptom is a ‘spongy’ brake pedal that goes all the way to the floor when all the other brake components are in good condition. The rubber parts wear with usage or deteriorate with age or fluid contamination. Corrosion or deposits formed in the cylinder bore due to moisture or dirt in the hydraulic system may result in wear of the cylinder bore or related parts. Do not try to remove corrosion or deposits with a cylinder hone. If corrosion or deposits are present, discard master cylinder and replace with new one.

Brake Fluid

NOTICE

Hydraulic brake systems must be totally flushed if the fluid becomes contaminated with water, dirt or other corrosive chemicals. To flush, bleed the entire system until all brake fluid has been replaced with fresh DOT 3 standard automotive brake fluid.

It is important to maintain proper fluid levels in the master cylinder. The fill cap for the cylinder is located under the driver seat. To prevent contamination when checking fluid, wipe off any dirt from fill cap before removing it. Reservoir fluid level should be checked per ‘PERIODIC SERVICE SCHEDULE’ in Section A. When required, clean brake fluid should be added to maintain fluid level 1/4" (6 mm) from top of reservoir. Use fresh DOT 3 standard automotive brake fluid.

Read all of Section B and this section before attempting any procedure. Pay particular attention to Notices, Cautions, Warnings and Dangers.

MASTER CYLINDER REPLACEMENT

CAUTION

During this process, it is likely that brake fluid will leak from the master cylinder. Avoid allowing brake fluid to contact the painted body components of the vehicle. Wipe off immediately.

Removing the front shield may improve access (See BODY).

To remove the master cylinder:

Turn vehicle key to 'OFF' and remove. Insure all optional electrical accessories are turned OFF. At the battery, remove the negative (-) cables. Cover top of battery with a cloth or non-conductive material to prevent the possibility of a dropped wrench or metal object from 'shorting out' the battery.

Clean the area around the master cylinder to prevent dirt and grease from contaminating the hydraulic system.

Disconnect wire terminal block from brake light switch (Refer Fig.1).

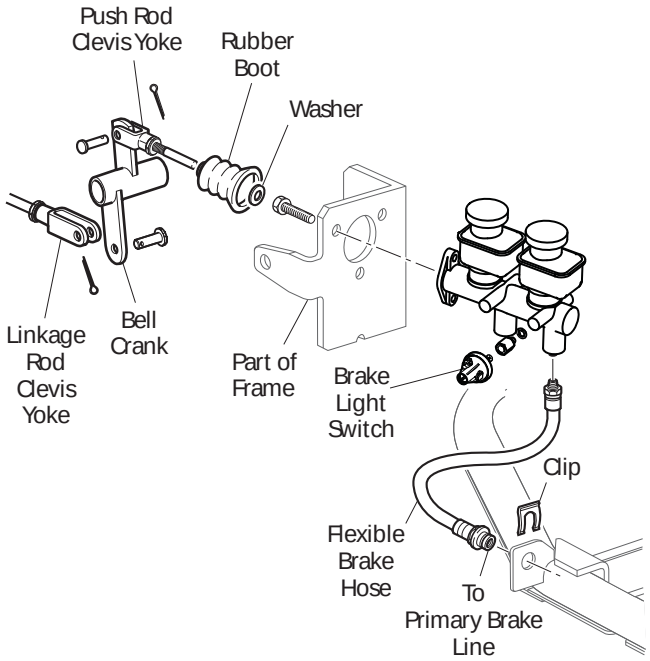

Fig. 2 Replacing master Cylinder

Disconnect primary brake line where it connects to flexible brake hose. Provide a catch pan for the released brake fluid. Remove clip anchoring flexible brake hose to subframe.

Disconnect clevis yoke from upper arm of bellcrank in front of master cylinder. Disconnect linkage rod clevis yoke from lower arm of bellcrank to allow bellcrank to swing out of the way. Pull clevis yoke and push rod out of master cylinder and remove boot.

Remove three lock nuts, lock washers and bolts and remove master cylinder from vehicle.

Remove flexible brake hose from branch tee.

Remove brake light switch from branch tee.

Remove plug from branch tee.

Do **not** reuse existing branch tee on new master cylinder.

Install **new** branch tee on new master cylinder using teflon tape and tighten so that one of the three threaded holes points straight down toward the ground at 70 - 80 in. lbs. (8 - 9 Nm) torque.

Install plug into branch tee using teflon tape and tighten to 70 - 80 in. lbs. (8 - 9 Nm) torque.

Connect flexible brake hose to branch tee using teflon tape and tighten to 190 - 200 in. lbs. (21.5 - 22.6 Nm) torque. Anchor other end to subframe with clip. Connect primary brake line to flexible brake hose and tighten fitting to 70 - 80 in. lbs. (8 - 9 Nm) torque.

Install brake light switch into branch tee using teflon tape and tighten to 70 - 80 in. lbs. (8 - 9 Nm) torque.

Mount master cylinder to frame bracket using new lock nuts. Do **not** reuse original lock nuts. Tighten lock nuts to 28 - 32 in. lbs. (3 - 4 Nm) torque.

Insert push rod through rubber boot and washer into master cylinder (make sure rod is through washer inside boot). Snap rubber boot back onto master cylinder.

Install both clevis yokes back onto bellcrank using clevis pins and new cotter pins.

WARNING

To prevent brake failure resulting from contaminated brake fluid, never reuse any excess fluid or return to the original container. Dispose of brake fluid properly.

Fill reservoir with DOT 3 brake fluid and bleed brake system. See "BLEEDING AND FLUSHING" on page N-9.

After bleeding brake system, check for leaks along all lines and at master cylinder.

Read all of Section B and this section before attempting any procedure. Pay particular attention to Notices, Cautions, Warnings and Dangers.

Connect the negative (-) battery cables.

BRAKE LINKAGE

The brake pedal linkage is set at the factory. However, if the master cylinder should have to be replaced, the linkage may require adjustment.

The master cylinder is located under the driver seat and is connected to the brake pedal by clevis yokes, threaded rods and a bellcrank.

Adjustment

Tool List	Qty. Required
Wrench, 1/2"	1
Pliers	1
Crowfoot wrench, 1/2", 3/8" drive	1
Torque wrench, in. lbs., 3/8" drive	1

NOTICE

The master cylinder has built in free travel.

Distance between rubber bumper and bumper mounting plate should be 7/8" - 1" and the brake pedal arm should

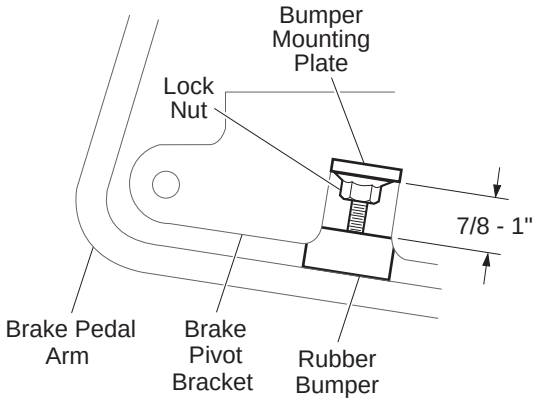

Fig. 3 Brake Pedal Bumper Adjustment

be approximately parallel to brake pivot bracket (Ref Fig. 3 on page D-4). If adjustment is needed, loosen lock nut and thread bumper in or out of mounting bracket as required and tighten lock nut to 13 ft. lbs. (18 Nm) torquet.

Remove cotter and clevis pins attaching linkage rod to brake pedal arm but maintain alignment of holes (Ref Fig. 4 on page D-5). At this position, the push rod on opposite arm of bellcrank should be against piston in master cylinder but should not be applying any force. If push rod is not against piston or is applying force, loosen jam nut at free end of linkage rod and thread clevis yoke forward or back as required. Tighten jam nut to 65 - 75 in. lbs. (7 - 8 Nm) torque.

Master cylinder piston should begin to move immediately upon any activation of the brake pedal.

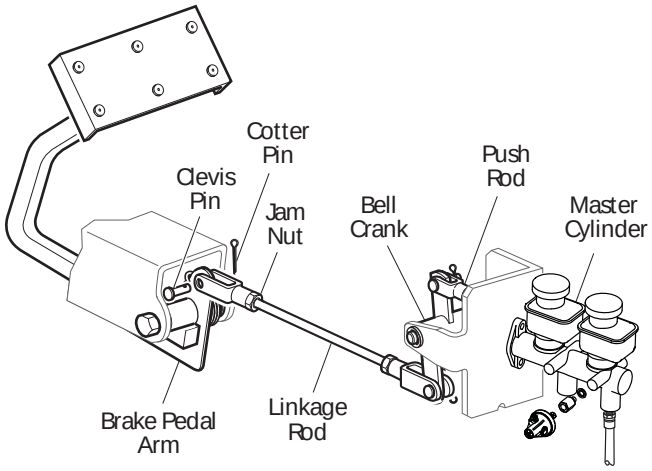

Factory Settings Before Adjustment

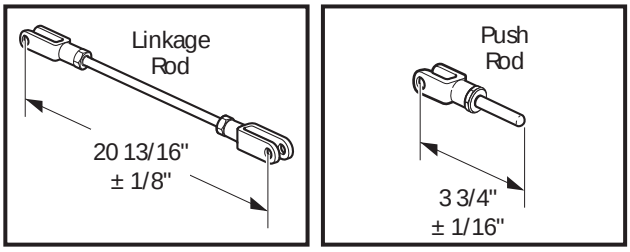

Fig. 4 Linkage Adjustment

BRAKE DRUM REMOVAL AND INSTALLATION

Tool ListQty.

Slip joint pliers	1
Needle nose pliers	1
Socket, 1 1/8", 1/2" drive	1
Ratchet, 1/2" drive	1
Plastic faced hammer	1
Drum puller (P/N 15947-G1)	1
Wrench, 7/16"	1
Anti-seize compound	A/R
Torque wrench, 1/2" drive, ft. lbs.	1

Read all of Section B and this section before attempting any procedure. Pay particular attention to Notices, Cautions, Warnings and Dangers.

WARNING

The drum must not be turned to 'true' a worn friction surface. Turning will make the drum too thin causing drum and brake failure which could cause severe injury or death.
Wear a dust mask and eye protection whenever working on wheel brakes. Do not use pressurized air to blow dust from brake assemblies.

Remove cap to gain access to the castellated nut and the cotter pin .
Remove the cotter pin and castellated nut as shown in the Fig. 5.

NOTICE

Do not apply the brake when removing the nut as the shoes may not fully retract preventing removal of the brake drum.

Pay particular attention to the location of the inner brake drum washer inside the brake drum, which may be on the axle shaft or attached to the rear of the drum hub. This washer must be reinstalled when the brake is reassembled.

Remove washer and adapter.

Slide the brake drum from the axle shaft. If required, tap the drum with a plastic faced hammer to loosen it from the axle shaft or use drum puller.

If shoes interfere with drum removal, rotate adjuster bolt on back side of backing plate towards the axle to retract shoes and remove brake drum.

To install the brake drum, clean the axle shaft and the splines on the brake drum to remove dirt, grease and foreign matter. Apply a small amount of anti-seize compound to the axle spline. Install the inner brake drum washer and slide the brake drum into place. Check to insure the nose of drum hub is beyond the end of the axle splines. If not, remove drum and install one additional inner brake drum washer (total of 2) to obtain required spacing. If two inner brake drum washers do not provide the required spacing, the brake drum is incorrect and must be replaced with a new drum

CAUTION

Do not back off nut to install cotter pin.

Install the remaining hardware and tighten the nut to 70 ft. lbs. (95 Nm) torque. Continue to tighten until a new cotter pin can be installed through the castellated nut and the hole in the axle. Maximum torque is 140 ft. lbs. (190 Nm).

WHEEL BRAKE SERVICE

Tool List	Qty.
Dust mask	1
Safety glasses	1
Socket, 3/4", 1/2" drive	1
Ratchet, 1/2" drive	1
Wheel chocks	4
Hydraulic floor jack	1
Jack stands	2
Brush	1
Wheel cylinder clamp	1
Pliers	1
Wrench, 9/16"	1
Wrench, 10 mm	1
Shop towels	A/R
Socket, 7/16", 3/8" drive	1
Torque wrench, 3/8" drive, in. lbs.	1
Wire brush	1
Grease	A/R
High temperature lubricant	A/R
Socket, 10 mm, 3/8" drive	1
Socket, 9/16", 3/8" drive	1
Locking pliers	1
Thread locking compound	A/R

WARNING

Wear a dust mask and eye protection whenever working on wheel brakes. Do not use pressurized air to blow dust from brake assemblies. Replace both brake shoes on both wheels if one or more shoes are worn below .06" (1.5mm) thickness at any point.

Read all of Section B and this section before attempting any procedure. Pay particular attention to Notices, Cautions, Warnings and Dangers.

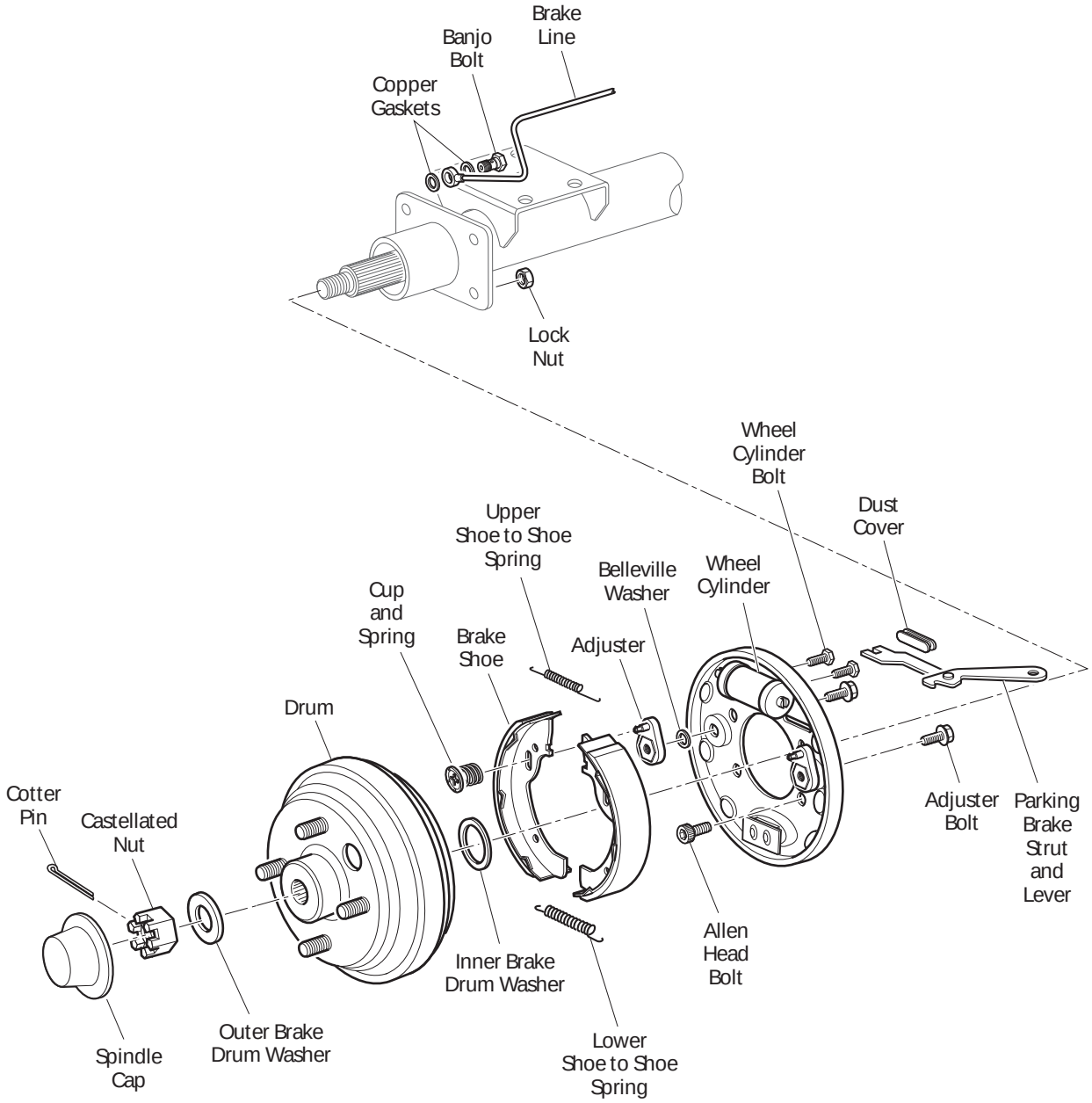

Fig. 5 Wheel Brake Components

Read all of Section B and this section before attempting any procedure. Pay particular attention to Notices, Cautions, Warnings and Dangers.

CAUTION

Do NOT touch any of the wheel brake mechanism except as instructed.

Do NOT use a commercial brake cleaner unless the entire brake has been disassembled.

Be sure that the parking brake is released.

Loosen rear wheel lug nuts and lift rear of vehicle Remove wheel and drum. Refer Fig. 5. Remove excess dust and dirt from the drum with a brush.

Remove any accumulated brake dust from the wheel brake assembly with a brush.

Install wheel cylinder clamp, then unhook upper and lower shoe to shoe springs.

Remove parking brake strut and lever.

Remove shoe hold-down springs and remove shoes.

If the wheel cylinder must be removed, begin by loosening and removing the brake line from the back of the wheel cylinder. Next remove the wheel cylinder bolts and remove the wheel cylinder from the backing plate.

Cleaning And Inspection

WARNING

The drum must not be turned to 'true' a worn friction surface. Turning will make the drum too thin causing drum and brake failure which could cause severe injury or death.

A backing plate assembly that shows any indication of galling or gouging is not repairable and must be replaced with a new wheel brake assembly. Always replace wheel brake assemblies in pairs.

Inspect the brake drum. Look for a blue coloration or blistered paint that would indicate that it has overheated. Check for evidence of scoring. Check for excessive wear indicated by the friction surface being significantly worn and leaving a ledge of unworn drum. Inspect the splines for galling, wear and corrosion. If any of these problems are found, the drum must be replaced.

Visually inspect the axle seal for oil leakage and the condition of the thrust washer. If oil is present, see REAR AXLE section.

Verify the inner brake drum washer is present and check its condition. Replace if damaged or missing.

Clean the backing plate with an approved cleaner for this purpose.

Inspect the backing plate. Inspect for gouges, galling or other damage, particularly where the backing plate is contacted by the brake shoes. Be sure shoe ledges are smooth and free of rough edges. Replace both wheel brake assemblies if any gouges or galling is found.

Measure the brake shoe thickness. Measure at the most worn area. Brake shoe thickness must never be less than .06" (1.5 mm) at any point on the shoe. It is normal for the shoes to show more wear at the leading and trailing edges. If the brake shoe thickness is approaching .06" (1.5 mm), it is recommended that the shoes be replaced. It is recommended that the brake shoe springs and brake adjusters be replaced when installing new brake shoes

Check springs for loss of tension and damage. Replace weak springs and any damaged or badly worn parts.

Check adjuster operation. Insure that each adjuster will move with approximately 30 - 50 in. lbs. (3.4 - 5.6 Nm) of torque. If adjusters are frozen, badly worn or loose, replace the adjuster assembly.

Replace the wheel cylinder if there is any sign of leakage.

Insure that the parking lever and strut assembly can be easily moved by hand. If necessary, this assembly can be serviced as follows:

Disassemble by removing the C-clip. Wire brush contact surfaces to remove any corrosion and contaminants. Lightly grease the pin and contact surfaces before reassembly.

WARNING

Insure that the C-clip is completely seated in its' groove when finished. Failure to do so could result in a non-functioning parking brake if the clip comes off.

The brake fluid should be checked at regular intervals (as specified in the Periodic Service Schedule) or immediately if fluid leaks are found. The easiest way to check fluid level is to clean the cap with a shop rag and remove the cap. Check fluid level using a mechanics mirror and a flashlight. Add fluid if the level has fallen below 1/4" from the top of the reservoir and inspect for visible fluid leaks.

Read all of Section B and this section before attempting any procedure. Pay particular attention to Notices, Cautions, Warnings and Dangers.

ROUTINE MAINTENANCE

Tool List	Qty.
Shop Rag	A/R
Mechanics Mirror	1
Flashlight	1
Transmission Fluid Funnel	1
Torque Wrench ft. lbs	1
Torque Wrench in. lbs.	1
Crows Foot 9/16”	1
Open end Wrenches 3/8”, 1/2”, 5/8”, 9/16”	1
Needle Nose Pliers	1
Ratchet	1
Sockets 3/8”, 1/2”, 5/8”, 9/16”	1
Micrometer/Vernier Caliper	1
2” C Clamp	1
Floor Jack	1
Jack Stands	1
Ball Joint Separator	1
Lug Wrench, 3/4"	1
Jack	1
Jack stands	4
Brake adjusting tool	1
Plastic faced hammer	1

WARNING

Never work on a vehicle supported by a jack alone. To prevent possible personal injury, the vehicle must be supported on jack stands during this procedure.

REPLACEMENT OF WEAR ITEMS

Brake Pad Replacement

Brake pads should always be replaced as a full set of four pads. To remove the brake pads, raise the vehicle per ‘Lifting the Vehicle’ in the SAFETY section. Loosen both of the bolts securing the caliper to the spindle but only remove one. Swing the caliper free from the rotor. Push out the two guide/retainer pins from the caliper and remove the pads, being careful to note the orientation of the brake pads. Install a new set of pads. If the pads have been correctly oriented, the guide pins will easily engage. Re-insert the guide/retainer pins, being sure that they are correctly seated in the grooves machined in the caliper casting. Gently push the pads away from each other to provide adequate clearance with the rotor and then swing the entire caliper and pad assembly back over the rotor. Secure the caliper to the spindle and tighten both bolts to 25 - 30 ft. lbs. (33.8 - 40.6 Nm) torque. NOTE: Unless fluid is lost or a brake line is disconnected, there is no need to bleed the system.

For Hub Replacement, Wheel Bearing and Race Replacement, Wheel Bearing Packing and Wheel Bearing Adjustment procedures, see FRONT SUSPENSION AND STEERING.

Spindle Replacement

See FRONT SUSPENSION AND STEERING.

Actuator Linkage Bushings

Removing the front shield may improve access (See BODY)

The actuator linkage is connected to the lower actuator pivot with a flat washer and cotter pin. Remove and discard the cotter pin and remove the washer. A new nylon bushing may be installed (flange down) to the lower actuator pivot and the actuator linkage reinstalled using a new cotter pin. The actuator linkage is connected to the brake pedal arm with a flat washer and cotter pin. Remove and discard the cotter pin and remove the washer. A new nylon bushing may be installed (with the flange between the actuator linkage and the brake pedal arm) to the lower actuator pivot and the actuator linkage reinstalled using a new cotter pin.

BLEEDING BRAKES

Tool List	Qty.
Hose	A/R
Clean Container	1
Brake Fluid, DOT 3	A/R
Wrench, 1/4" box end	1

The hydraulic brake system must be free of air to operate properly. Air can enter the system when hydraulic parts are disconnected for servicing or replacement, or when the fluid level in the master cylinder reservoir is very low. Air in the system will give the brake pedal a spongy feeling upon application.

NOTICE

An assistant will be necessary to perform this procedure.

Use a clean cloth to wipe off the master cylinder reservoir and wheel cylinder bleeder valves (Ref. Fig. 1). Clean each fitting before opening to prevent contaminat-

Read all of Section B and this section before attempting any procedure. Pay particular attention to Notices, Cautions, Warnings and Dangers.

ing the system. Open the master cylinder reservoir and top off with standard automotive DOT 3 brake fluid.

⚠ WARNING

Never reuse any excess fluid or return to the original container. Dispose of brake fluid properly.

Brake fluid should never be returned to the original container and reused due to the possibility of contamination by dirt, grease, moisture or used brake fluid which could cause failure of the braking system. Dispose of in accordance with Federal, state and local codes.

Attach a short length of clear hose to the caliper bleed valve and insert the other end into a suitable clean container containing fresh, clean brake fluid (Ref. Fig. 6) Check the fluid level in the master cylinder frequently during this operation to prevent air from entering the lines.

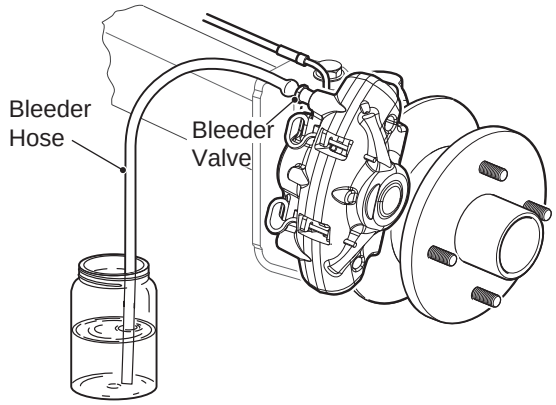

Fig. 6 Bleeder Valve

Starting with the passenger side rear brake and going to the driver side rear brake, bleed the brakes using the following procedure:

The bleeder valve at the caliper must be closed at the end of each stroke and before the brake pedal is released to insure that air cannot enter the system. It is also important that the brake pedal be returned to full ‘up’ position.

Open the bleeder valve and have an assistant depress brake pedal **gently** until fluid flows into container. Close the bleeder valve and have the assistant slowly release the brake pedal. Repeat the process until no bubbles can be seen leaving the bleeder valve. Close the valve and repeat at other side. After bleeding, check fluid level using a mechanics mirror and a flashlight. Add fluid if the level has fallen below 1/4” from the top of the reservoir and inspect for visible fluid leaks.

Read all of Section B and this section before attempting any procedure. Pay particular attention to Notices, Cautions, Warnings and Dangers.

PARKING BRAKE

The rear brake includes a parking feature consisting of a wheel brake lever and strut. The wheel brake lever is applied by a cable attached to the parking brake lever (hand or foot operated). The parking brake is used to retain the vehicle when stationary. It may also be used as an emergency brake in the event of hydraulic system failure.

The hand operated parking brake lever is located at the right side of the driver in the console between the front seats (Ref. Fig. 7) .

Lubrication

CAUTION

When lubricating parking brake, be sure to use the recommended dry spray lubricant. Commercial grease can attract dirt and accelerate wear.

The hand operated parking brake lever requires periodic lubrication with a dry graphite or molybdenum disulfide lubricant. Raise the lever and spray into the underside to access the pivot arm and ratchet mechanism of the parking brake. See Section A - Periodic Service Schedule for recommended lubrication schedule.

Adjustment

The parking brake adjustment is made at the clevis yoke on the end of the parking brake lever cable located under the front seats. (Ref. Fig. 7)

Loosen jam nut at clevis yoke.

Remove cotter and clevis pin attaching clevis yoke to equalizer.

Rotate clevis yoke up or down the threaded end of cable and reconnect to equalizer to check tension. Correct tension is when, at the sixth click of the hand operated parking brake lever, vehicle movement is prevented while under a load on a typical area slope. Readjust if necesary.

Tighten jam nut firmly against clevis yoke to secure.

Cable Replacement

Cables should be replaced when they become inoperable. Cable replacement consists of first removing the cotter and clevis pins securing the cable to the equalizer and wheel brake levers. Then remove the retaining rings securing the cable to the frame and subframe. Install new cable in reverse order of removal and adjust parking brake system per instructions above.

Read all of Section B and this section before attempting any procedure. Pay particular attention to Notices, Cautions, Warnings and Dangers.

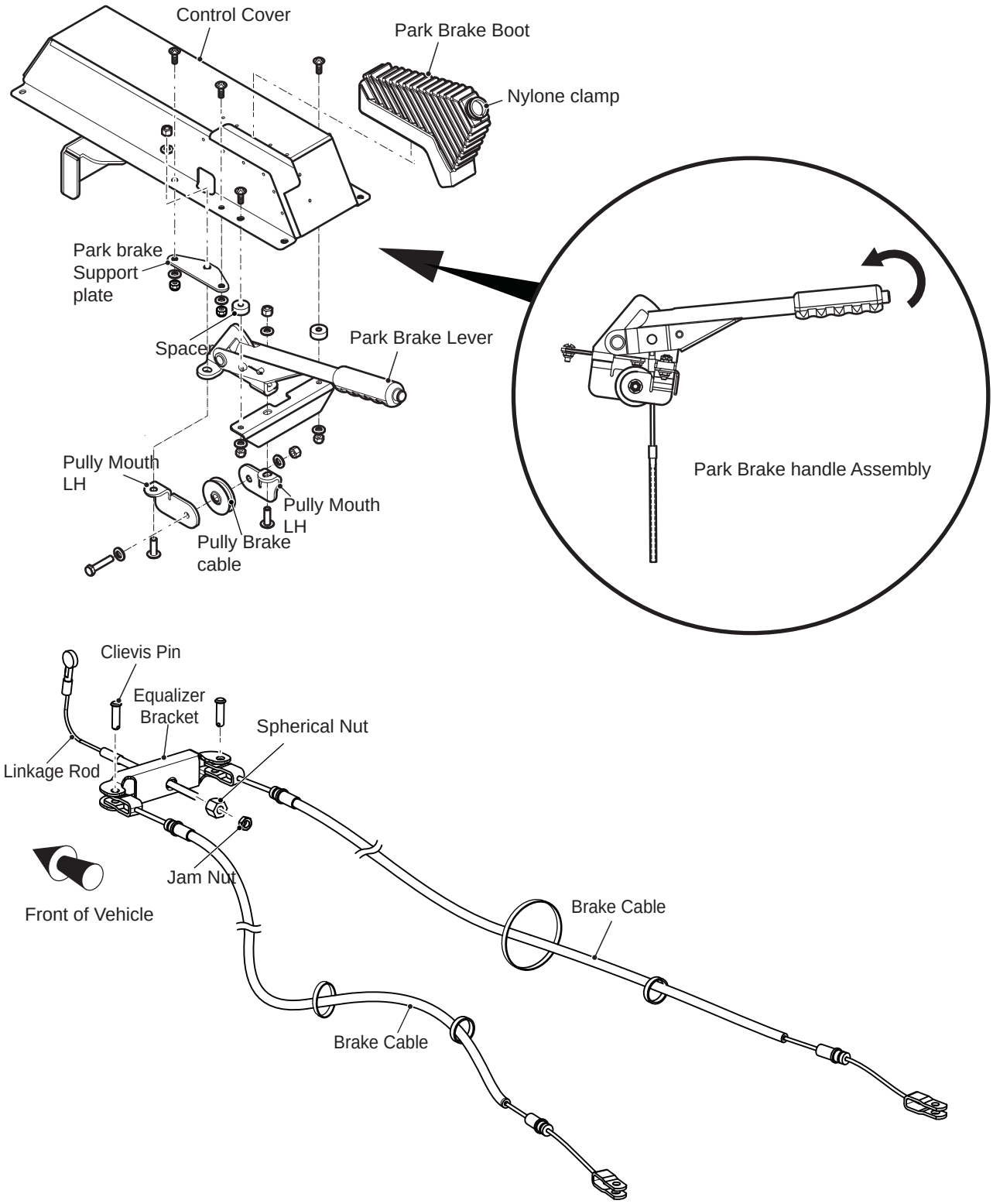

Fig. 7 Parking Brake System Components

Read all of Section B and this section before attempting any procedure. Pay particular attention to Notices, Cautions, Warnings and Dangers.

NOTES:

TABLE OF CONTENTS FOR SECTION 'Q'

SECTION TITLE **PAGE NO.**

REAR SUSPENSION ..... Q - 1
General ..... Q - 1
Shock Absorber Removal ..... Q - 1
Shock Absorber Installation ..... Q - 1
Rear Spring Removal ..... Q - 1
Rear Spring Installation ..... Q - 1

REAR AXLE REMOVAL ..... Q - 3
Rear Axle Installation ..... Q - 3

LIST OF ILLUSTRATIONS

Fig. 1 Rear Suspension ..... Q - 2

Read all of Section B and this section before attempting any procedure. Pay particular attention to Notices, Cautions, Warnings and Dangers

NOTES:

Read all of Section B and this section before attempting any procedure. Pay particular attention to Notices, Cautions, Warnings and Dangers.

REAR SUSPENSION

NOTICE

In the following text, there are references to removing/installing bolts etc. Additional hardware (nuts, washers etc.) that are removed must always be installed in their original positions unless otherwise specified. Non specified torque specifications are as shown in the table contained in Section “A”.

General

Tool List	Qty.
Wheel Chocks	4
Jack Stands	4
Floor Jack	1
Wrench, 1/2"	1
Wrench, 9/16"	1
Wrench, 3/4"	1
Socket, 1/2"	1
Socket, 9/16"	1
Socket, 9/16", Deepwell	1
Extension, 3"	1
Ratchet	1
Torque Wrench, ft. lbs.	1

The rear suspension consists of the rear axle and attachments that secure it to the springs and shock absorbers (Ref Fig. 1 on page P-2). In addition the rear axle is secured to the rear of the engine by means of a casting that is bolted to the engine and mounted to the rear axle with ‘U’ bolts. This section is confined to the removal and replacement of the springs and shock absorbers. Rear axle shaft removal is covered in REAR AXLE section.

Shock Absorber Removal

Raise the rear of the vehicle in accordance with the instructions provided in Section ‘B’ of this manual and support the rear of the vehicle on the outer ends of the rear bumper.

Remove the bottom shock absorber nut (1).(Ref Fig. 1).

Compress the shock absorber (2) and remove the top shock absorber nut (3).

Remove the shock absorber.

Shock Absorber Installation

Shock absorber installation is in the reverse order of disassembly except that the shock absorber nuts (1,3) must be tightened until the shock absorber bushings (4) expand to the diameter of the shock absorber washer (5).

Rear Spring Removal

⚠ WARNING

To reduce the possibility of personal injury, follow the lifting procedure in section ‘B’ of this manual. Place wheel chocks in front and behind the front wheels and check the stability of the vehicle on the jack stands before starting any repair procedure. Never work on a vehicle that is supported by a jack alone.

NOTICE

If both springs are to be replaced and the rear axle is not to be removed, it is important to remove and replace one spring at a time. Springs must be replaced in sets. Never replace just one.

Remove the bottom shock absorber nut (1) (Ref Fig. 1).

Place a floor jack under the center section of the rear axle (6) and raise just enough to place a second set of jack stands under the axle tubes. With both the rear axle and the frame supported, the ‘U’ bolt (7) and the hardware (8) can be removed.

Remove the rear spring shackle assembly (9) and the front spring mounting hardware (10).

Remove the spring (11).

Rear Spring Installation

Spring installation is in the reverse order of disassembly.

NOTICE

When installing the rear spring shackles, be sure that the cupped side of the shackle plate faces the spring.

The shock absorber nuts (1,3) must be tightened until the shock absorber bushings (4) expand to the diameter of the shock absorber washer (5) (Ref Fig. 1).

Tighten the front spring hardware (10) to 21 - 25 ft. lbs. (28 - 34 Nm) torque.

Tighten all other hardware to 18 - 22 ft. lbs. (24 - 30 Nm) torque.

REAR SUSPENSION

Read all of Section B and this section before attempting any procedure. Pay particular attention to Notices, Cautions, Warnings and Dangers.

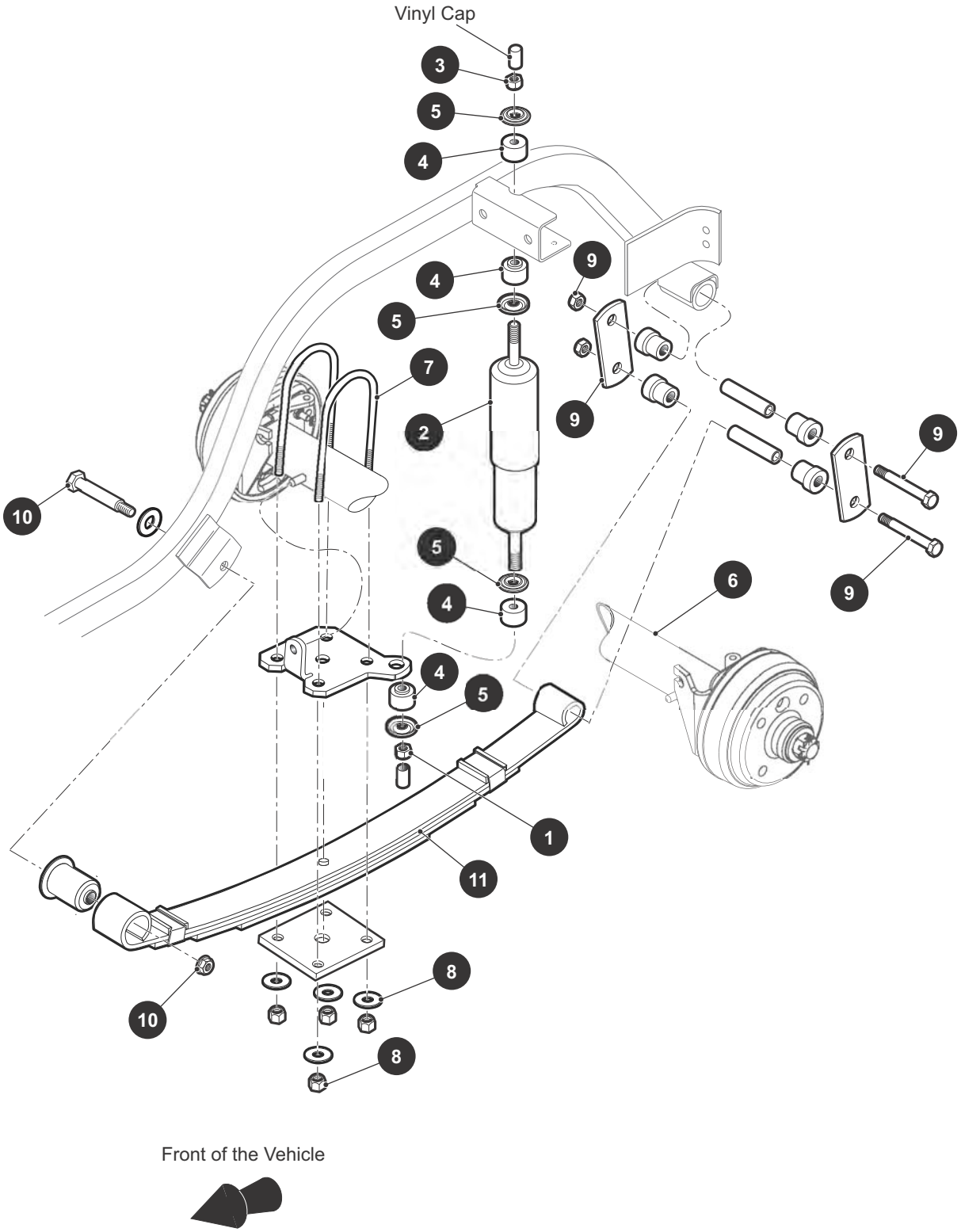

Fig. 1 Rear Suspension

Read all of Section B and this section before attempting any procedure. Pay particular attention to Notices, Cautions, Warnings and Dangers.

REAR AXLE REMOVAL

Tool List	Qty. Required
Lug Wrench, 3/4"	1
Impact Wrench	1
Impact Socket, 3/4"	1
Torque Wrench, ft. lbs.	1
Socket, 3/4"	1
Ratchet	1
Thread Locking Sealant	A/R
Wrench, 12mm	1
Wheel Chocks	4
Jack Stands	4
Floor Jack	1
Wrench, 1/2"	1
Wrench, 9/16"	1
Wrench, 3/4"	1
Socket, 1/2"	1
Socket, 9/16"	1
Socket, 9/16", Deepwell	1
Extension, 3"	1
Ratchet	1
Torque Wrench, ft. lbs.	1

WARNING

To reduce the possibility of personal injury, follow the lifting procedure in section 'B' of this manual. Place wheel chocks in front and behind the front wheels and check the stability of the vehicle on the jack stands before starting any repair procedure. Never work on a vehicle that is supported by a jack alone.

Raise the rear of the vehicle in accordance with the instructions provided in Section 'B' of this manual and support the rear of the vehicle on the outer ends of the rear bumper.

Remove the tires. See WHEELS AND TIRES section.

Remove the muffler. See ENGINE section. Remove the triangular bracket supporting the differential to the engine frame.

Remove the 'U' bolts holding axle to engine frame.

Remove the drive belt and driven clutch (see CLUTCHES section).

Remove the F/R shifter bracket nut and loosen the cable nuts, then remove the cable and bracket from the differential.

Remove the accelerator cable from the accelerator bracket and take off the push nut holding the cable on the governor and remove the cable. See SPEED CONTROL section. Remove the linkage rod off of the governor.

Remove the shock absorbers (see removal elsewhere in this section).

Remove the clevis pin from both brake cables where they attach to the wheel brake levers. Remove the brake cable from the brakes. Remove the retaining rings at either end of the outer brake cable and move cables out of the way of the axle.

Place a floor jack under the center section of the rear axle and raise just enough to place a second set of jack stands under the axle tubes. With both the rear axle and the frame supported, the 'U' bolt and the hardware can be removed from the spring. Raise the back of the vehicle and take the springs loose at the rear shackle.

Slide rear axle out of vehicle.

Rear Axle Installation

Rear axle installation is in the reverse order of removal.

Pay particular attention to placement of axle in the engine frame support. See 'Engine Installation' in the ENGINE section.

Read all of Section B and this section before attempting any procedure. Pay particular attention to Notices, Cautions, Warnings and Dangers.

NOTES:

TABLE OF CONTENTS FOR SECTION 'R'

SECTION TITLE **PAGE NO.**

NEUTRAL LOCK ..... **R - 1**

REAR AXLE ..... **R - 1**
Checking the Lubricant Level ..... R - 1

REAR AXLE DISASSEMBLY ..... **R - 2**
Axle Shaft Removal and Disassembly ..... R - 2
Axle Shaft Seal Removal and Replacement ..... R - 3
Axle Shaft Replacement ..... R - 3

LIST OF ILLUSTRATIONS
Fig. 1 Neutral Lock (Direction Selector ..... R - 1
Fig. 2 Add, Check and Drain Rear Axle Lubricant ..... R - 1
Fig. 3 Removing/Installing Outer Snap Ring ..... R - 2
Fig. 4 Removing/Installing Axle Shaft ..... R - 2
Fig. 5 Pressing Bearing from Axle Shaft ..... R - 2
Fig. 6 Removing/Installing Seal ..... R - 3
Fig. 7 Cut Away of Outer Bearing and Brake Drum ..... R - 3

Read all of Section B and this section before attempting any procedure. Pay particular attention to Notices, Cautions, Warnings and Dangers

NOTES:

Read all of Section B and this section before attempting any procedure. Pay particular attention to Notices, Cautions, Warnings and Dangers.

For further axle information, see Four Cycle Transaxle Shop Rebuild and Service Parts Manual.

Refer to REAR SUSPENSION section for axle removal.

NEUTRAL LOCK

To prevent the driven clutch from turning the rear wheels during service operations and to prevent wear to the belt while being towed, a neutral lock is located on the direction selector.

The neutral lock is located on the direction selector. To operate neutral lock located on the direction selector, first turn the key switch to 'OFF', place direction selector in 'R' and remove seat. Pull out (1) and rotate(2) the neutral lock pin handle so that the pointed portion of the handle is over the side of the direction selector cam (Ref. Fig. 2). Move direction selector lever towards the area between 'F' and 'R'. During that motion, the pin will snap into the hole in the direction selector mounting bracket, preventing any movement of the lever. When in this position, the direction selector remains locked in the neutral position. To activate the direction selector, pull the neutral lock pin handle out and rotate until the pointed portion of the handle fits into the hole (3) in the direction selector cam.

⚠ WARNING

Spring loaded mechanism. To prevent possibility of fingers becoming pinched in the direction selector mechanism, hold direction selector lever when releasing neutral lock pin handle.

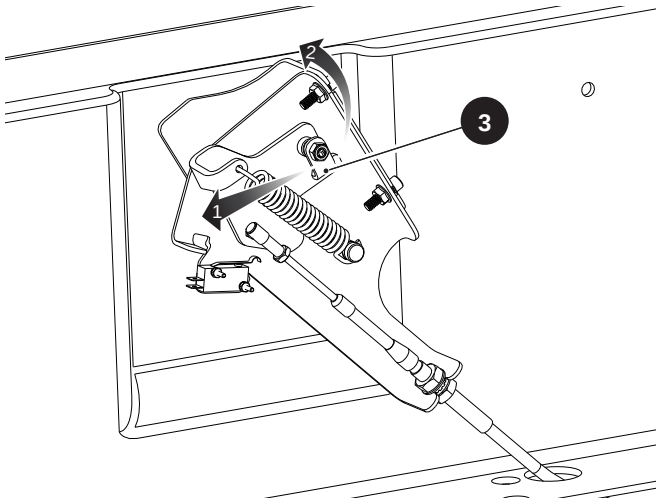

Fig. 1 Neutral Lock (Direction Selector)

REAR AXLE

The rear axle is provided with a lubricant level check plug located on the driver side at the rear of the housing (Ref. Fig. 2). Unless leakage of rear axle lubricant is evident, an annual lubricant check is sufficient.

Checking the Lubricant Level

Tool List	Qty.
Socket, 13 mm	1
Ratchet	1
Funnel	1

NOTICE

For vehicles with LSD axle, add 2 ounces of friction modifier during refill.

Clean the area around the check and fill plugs. Remove the check plug. The correct lubricant level is **just** below the bottom of the threaded hole. If lubricant is to be added, remove the fill plug and add lubricant using a funnel. Add lubricant slowly until lubricant starts to seep from the check plug hole. Install the check plug and the fill plug. In the event that the lubricant is to be replaced, a drain plug is provided at the bottom of the differential housing. Capacity of axle is 51 ounces (1.5 liters).

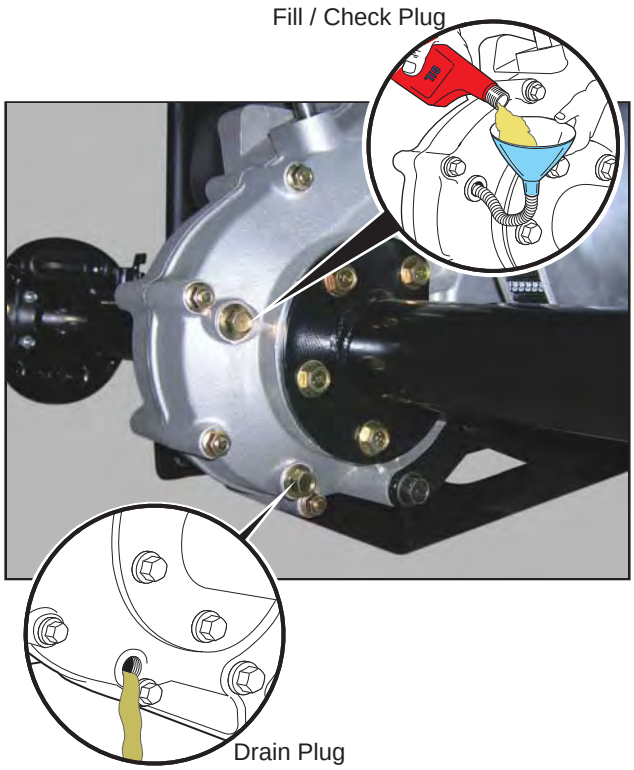

Fig. 2 Add, Check and Drain Rear Axle Lubricant

Read all of Section B and this section before attempting any procedure. Pay particular attention to Notices, Cautions, Warnings and Dangers.

REAR AXLE DISASSEMBLY

CAUTION

The rear axle is a precision assembly, and therefore any repair or replacement of parts must be done with extreme care in a clean environment. Before attempting to perform any service on the axle, read and understand all of the following text and illustrations before disassembling the unit.

Handle all gears with extreme care since each is part of a matched set.Damage to one will require replacement of the entire set or result in an unacceptably high noise level.

Snap rings must be removed/installed with care to prevent damage of bearings, seals and bearing bores.

NOTICE

It is recommended that whenever a bearing, seal or 'O' ring is removed, it be replaced with a new one regardless of mileage. Always wipe the seals and 'O' rings with a light oil before installing.

WARNING

To reduce the possibility of personal injury, follow the lifting procedure in SAFETY section of this manual. Place wheel chocks in front and behind the front wheels and check the stability of the vehicle on the jack stands before starting any repair procedure. Never work on a vehicle that is supported by a jack alone.

Axle Shaft Removal and Disassembly

Tool List	Qty.
Arbor Press	1
Bearing Separator	1
Needle Nose Pliers	1
Internal Snap Ring Pliers	1
Slide Hammer, P/N 18753-G1	1

For brake drum removal, see BRAKES section.

Remove the outer snap ring from the axle tube (Ref. Fig. 3).

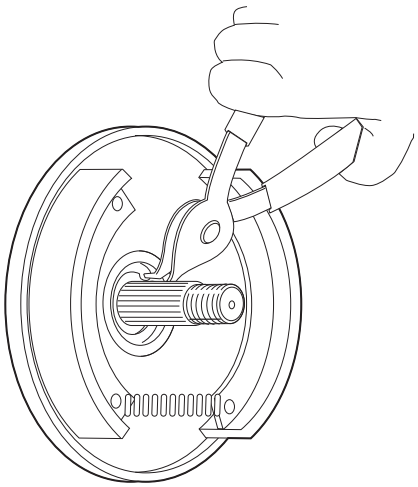

Fig. 3 Removing/Installing Outer Snap Ring

Attach a slide hammer to the axle shaft thread and remove the axle and bearing from the axle tube (Ref. Fig. 4).

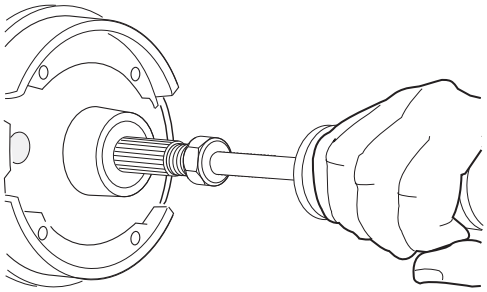

Fig. 4 Removing/Installing Axle Shaft

Remove the bearing by supporting the inner race of the bearing on an arbor press bed and apply pressure to the threaded end of the axle shaft (Ref. Fig. 5).

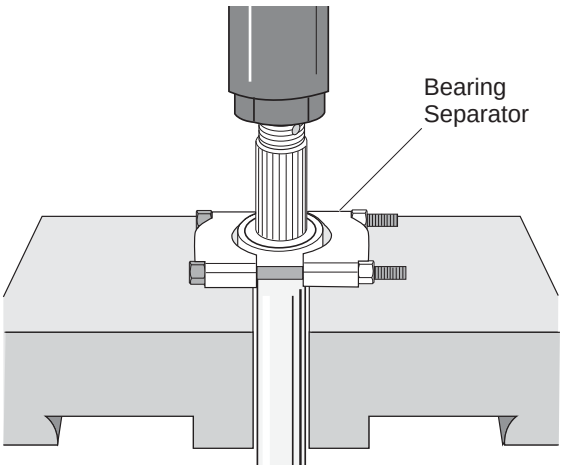

Fig. 5 Pressing Bearing from Axle Shaft

Read all of Section B and this section before attempting any procedure. Pay particular attention to Notices, Cautions, Warnings and Dangers.

Axle Shaft Seal Removal and Replacement

Tools List	Qty.
Internal Snap Ring Pliers	1
Seal Puller	1
Plastic Faced Hammer	1
Ratchet	1
Torque Wrench, ft. lbs.	1
Socket, 14mm	1

Using snap ring pliers, remove bearing retaining ring (1) from the end of axle tube (2). (Ref. Fig. 6).

Carefully pull axle shaft (3) and bearing out of the tube.

Using a 14 mm socket, remove the hardware (4) attaching the axle tube to the casing and carefully lift the tube from the casing studs.

Using seal puller, remove axle shaft seal (5) from casing.

CAUTION

Use care to prevent damage to the inner surface of axle tube at the sealing area.

Replace the seal by lightly tapping around the circumference with a plastic faced hammer. Tighten bolts (4) to 26 - 31 ft. lbs. (35 - 42 Nm) torque.

Axle Shaft Replacement

Carefully insert the axle shaft and bearing through the oil seal. Rotate the shaft until the spline engages with the differential side gears. Install the outer snap ring.

Coat the outboard spline of the axle with an anti-seize compound. Install the brake hub and drum, thrust washer, nut and new cotter pin (Ref. Fig. 7).

NOTICE

Tighten the castellated axle nut to 70 ft. lbs. (95 Nm) torque minimum. Continue to tighten until the slot in the nut aligns with the cotter pin hole.

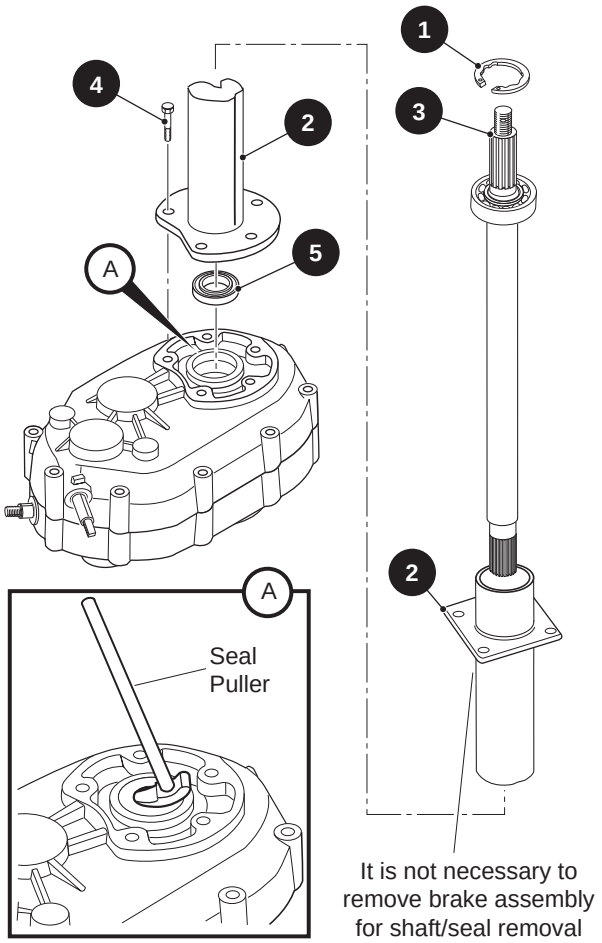

Fig. 6 Removing/Installing Seal

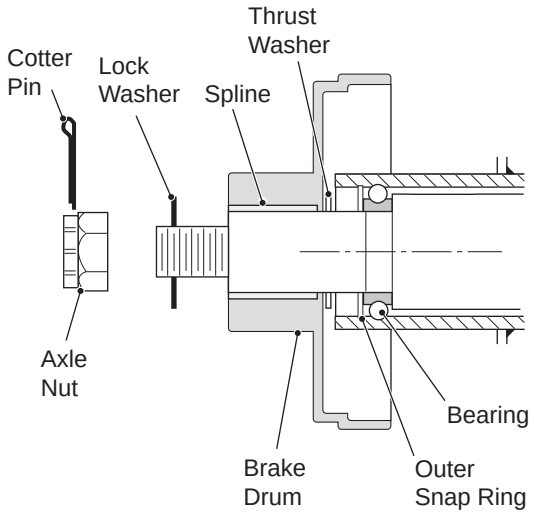

Fig. 7 Cut Away of Outer Bearing and Brake Drum

Read all of Section B and this section before attempting any procedure. Pay particular attention to Notices, Cautions, Warnings and Dangers.

NOTES:

TABLE OF CONTENTS FOR SECTION 'S'

SECTION TITLE	PAGE NO.
BODY	S - 1
ENGINE ACCESS	S - 1
REFRESHMENT UNIT	S - 1
WINDSHIELD AND MIRROR INSTALLATION	S - 2
CANOPY FRAME INSTALLATION	S - 2
CANOPY	S - 3
DRAIN VALVE INSTALLATION	S - 4
REFRESHMENT UNIT OPERATION, MAINTENANCE AND CLEANING	S - 4
REFRESHMENT UNIT REPLACEMENT PARTS	S - 4

LIST OF ILLUSTRATIONS

Fig. 1 Mounting the Refreshment Unit ..... S - 3

Read all of Section B and this section before attempting any procedure. Pay particular attention to Notices, Cautions, Warnings and Dangers

NOTES:

Read all of Section B and this section before attempting any procedure. Pay particular attention to Notices, Cautions, Warnings and Dangers.

BODY

WARNING

The battery should always be removed before any servicing that could generate sparks. The fuel tank must always be protected to prevent it being punctured by a drill bit.

None of the metal body panels need to be removed to perform any servicing operations. However, all body panels are removable should one be damaged and need repair or replacement. Refer to BODY section for information pertaining to the vehicle body.

ENGINE ACCESS

It is not necessary to remove the vending unit from the vehicle in order to perform any servicing operations. To access the engine compartment, first lift the seat bottom up and forward and then lift the hinged engine cover panel up and back (Ref Fig. 2).

REFRESHMENT UNIT

Tool List	Qty.
Ratchet	1
Socket, 1/2"	1
Wrench, 1/2"	1
Phillips Screwdriver	1
Wrench, 7/16"	1
Drill	1
Socket Adapter, 1/4" drive	1
Socket, 5/16"	1

REFRESHMENT UNIT REMOVAL

WARNING

The vending unit is heavy. Care and proper lifting equipment and procedures must be used when removing unit to reduce the possibility of severe injury and/or damage to the unit. Be sure hands and fingers are clear of unit while lowering.

CAUTION

The drain valves protrude below the frame of the unit and can be damaged if the unit is removed from pallet and placed directly onto a flat surface. Remove drain valves from refreshment unit before removing unit.

Refreshment unit removal is the reverse order of installation (See INSTALLING VENDING UNIT ON VEHICLE, FRONT STRUT INSTALLATION, WINDSHIELD AND MIRROR INSTALLATION, CANOPY FRAME INSTALLATION, CANOPY INSTALLATION and DRAIN VALVE INSTALLATION). The unit should be lifted onto a pallet being careful not to damage drains and then handled with a forklift. If a forklift is not available, be sure an adequate number of assistants are available to safely lift the vending unit and pallet.

INSTALLING VENDING UNIT ON VEHICLE

The vending unit is heavy. Care and proper lifting equipment and procedures must be used when installing unit to reduce the possibility of severe injury and/or damage to the unit. Be sure hands and fingers are clear of unit while placing unit on frame.

Orient vending unit so that door on unit will be facing the rear of the vehicle when unit is placed on the mounting frame (Ref Fig. 2). Using a forklift, lift the refreshment unit and pallet level with the bed of refreshment vehicle. Lift the refreshment unit off of the pallet and carefully place it onto the mounting frame on vehicle. Align the four mounting holes on refreshment unit with corresponding holes on vehicle mounting frame. Secure unit to frame with four 5/16 - 18 X 1 1/4" bolts (1) and four 5/16 - 18 lock nuts (2). Tighten hardware firmly.

FRONT STRUT INSTALLATION

Position front strut (4) as shown (Ref Fig. 2) and secure to vehicle at each side of the cowl with four 5/16 - 18 X 2 1/2" bolts (6), four 5/16" lock washers (7), two spacers (8) and six 3/8" flat washers (9). Attach canopy frame mounting plate (13) to front strut using two 1/4 - 20 X 1 1/2" bolts ((14). Tighten hardware firmly.

WINDSHIELD AND MIRROR INSTALLATION

WARNING

Typical operation of a Refresher® vehicle on a golf course may expose operator to possibility of being struck by a golf ball. Always operate vehicle with windshield in place.

Insert two bumpers (17) and four grommets (18) into holes in windshield as shown (Ref Fig. 1). Position windshield and mirror brackets (20) as shown. Secure windshield and mirror brackets to front strut with four 1/4 - 20 X 1 3/4" bolts (21), four spacers (22), four 1/4" washers (23) and four 1/4 - 20 lock nuts (24). Tighten hardware

Read all of Section B and this section before attempting any procedure. Pay particular attention to Notices, Cautions, Warnings and Dangers.

firmly. Thread mirrors (25) onto mirror brackets and tighten securely.

CANOPY FRAME INSTALLATION

Orient the two canopy frame sections end to end aligning five existing mounting holes as shown (Ref Fig. 1) and fasten together with five 1/4 - 20 X 2" bolts, ten 1/4" flat washers and five 1/4 - 20 lock nuts. Orient the assembled canopy frame as shown and rest front of frame on top mounting plate and rear of frame on refreshment unit struts. Secure canopy frame to refreshment unit struts with two 1/4 - 20 X 1 1/4" bolts, four 1/4" flat washers and two 1/4 - 20 lock nuts as shown. Secure canopy frame to front strut with two 1/4 - 20 X 2" bolts, four 1/4" flat washers and two 1/4 - 20 lock nuts as shown. Tighten hardware firmly.

CANOPY

Wipe canopy frame with a clean cloth. Unfold canopy and locate clearance openings in the mounting flap. Drape canopy over frame and orient canopy on frame so that clearance openings match strut attachment points and canopy frame juncture. With the aid of assistants, pull canopy taut over canopy frame. Fold mounting flap up inside canopy frame as shown. Secure each mounting flap to inner surface of canopy frame with #10 X 1/2" self tapping screws evenly spaced approximately 9" apart as shown. To prevent “gathering” of canopy material during installation, use the aid of assistants to hold the canopy taut while securing to canopy frame. For best results, begin securing the canopy at the middle of each side and proceed to each end of frame.

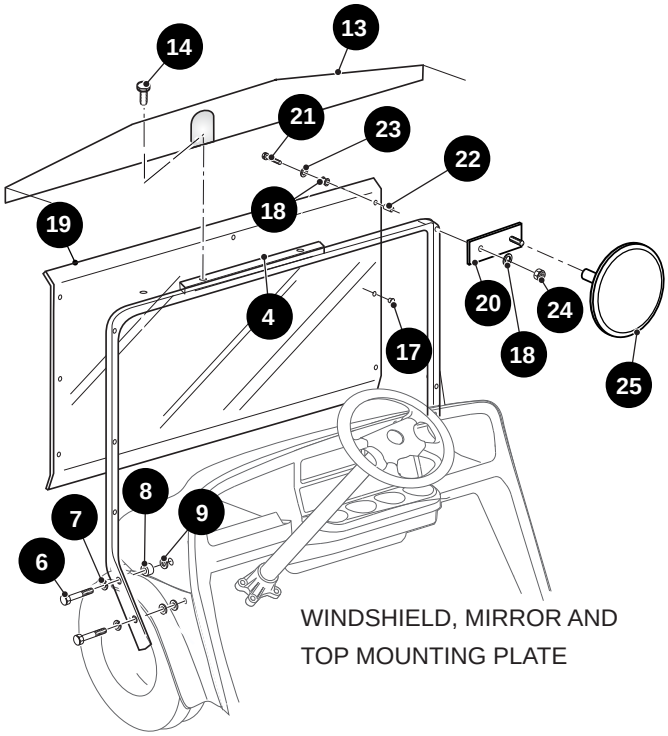

Fig. 1 Front Strut, Windshield and Mirror Installation

DRAIN VALVE INSTALLATION

Locate the drain hose ends and drain valve mounting holes under the rear of unit. Orient each drain valve assembly with spigot facing rearward. Attach each valve assembly to unit with two 1/4 - 20 X 3/4" screws. Slide the hose clamps onto the end of each drain hose. Push the hose ends onto the drain valves and tighten clamps.

REFRESHMENT UNIT OPERATION, MAINTENANCE AND CLEANING

Operation

WARNING

Consumable ice must be stored in the rear driver side compartment only. Clean this compartment and the driver side drain valve before and after each use to reduce the possible contamination of consumable ice.

Canned Beverage Compartments - The canned beverage compartments are designed to carry canned beverages and cooling ice. Cold snacks (sandwiches, fruit, candy etc.) can also be served from these compart-

Read all of Section B and this section before attempting any procedure. Pay particular attention to Notices, Cautions, Warnings and Dangers.

ments by inserting the product into a plastic food container. Precooling the canned beverages will minimize the amount of ice required to keep the product cool. Maintaining ice in the canned beverage compartment when the container is not in service will help to maintain a colder temperature when the unit is put back into service.

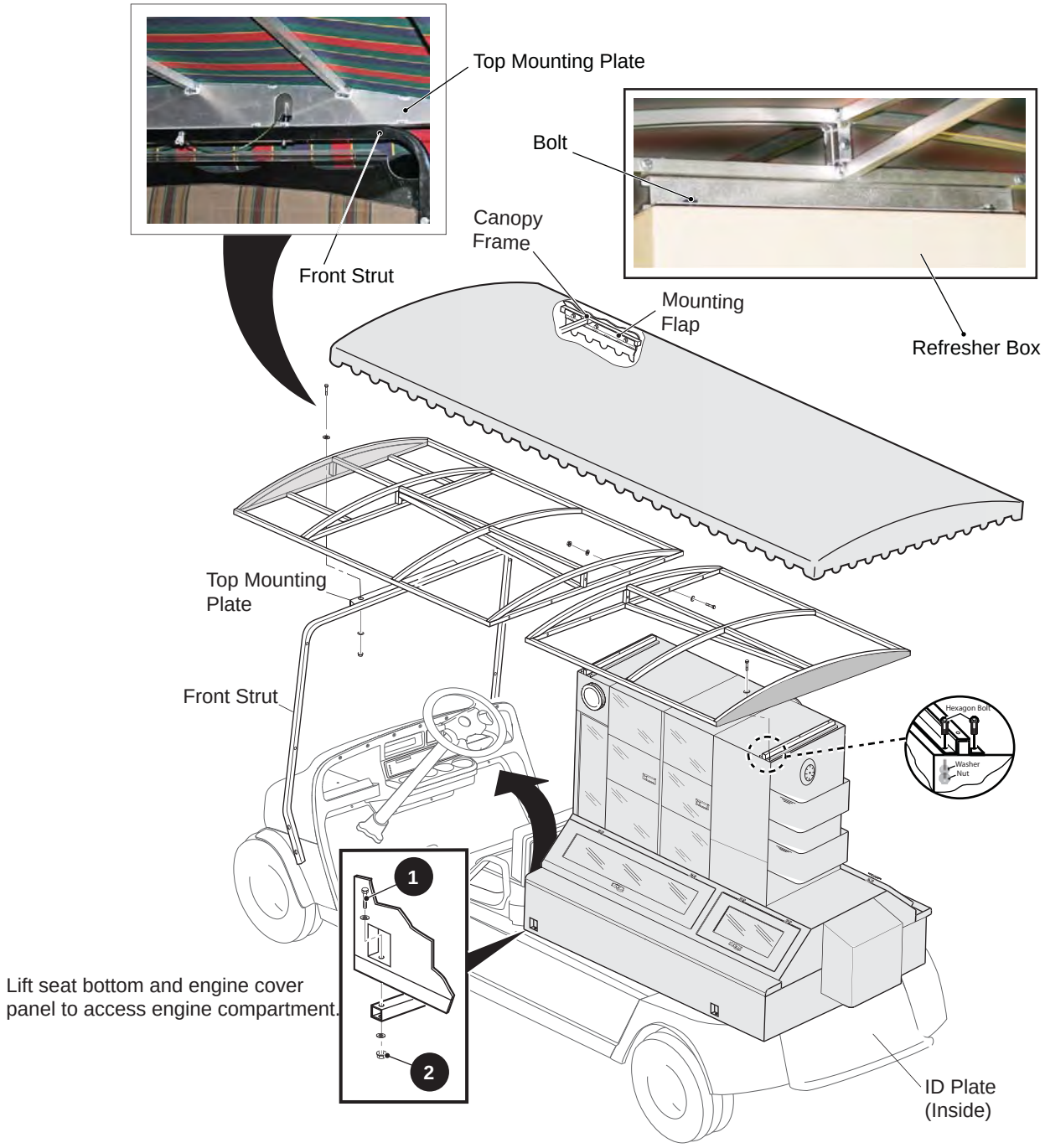

Fig. 2 Canopy Installation

Read all of Section B and this section before attempting any procedure. Pay particular attention to Notices, Cautions, Warnings and Dangers.

Consumable Ice Compartment - The consumable ice compartment, located in the rear driver side of the beverage container is to be used for consumable ice only. This compartment is equipped with it's own drain per FDA requirements and should not be used for canned goods or other products.

Trash Compartment - The trash compartment is located in the rear of the vehicle. The aluminum trash bin should be lined with a disposable plastic bag to maintain cleanliness. The trash bin is removable from the rear door only.

Drains - The two spigot valves, located under the rear of the beverage container, drain the compartments. To open the valves, simply turn the valve handles away from the vehicle (Ref Fig. 3). To close the valves, turn the valve handles to a position parallel with the vehicle. It is recommended that the valves be left in an open position while the vehicle is in service.

Cup Dispensers - The cup dispensers are designed to carry cups ranging from 14 to 20 ounces. To adjust the cup dispenser for your size and type of cup, remove the outer collar, insert a sleeve of cups into the dispenser, and turn the adjusting screw until the cups are securely held in the cup dispenser. Re-install the outer collar.

Shelves are to be used for any type of dry good such as chips, peanuts, hats, golf balls etc.

Air Pot - The three one gallon Air Pots are for serving hot or cold beverages.

Cleaning

Interior Aluminum Surfaces - The interior surfaces should be cleaned on a daily basis using a soap and water solution. Thoroughly rinse after cleaning.

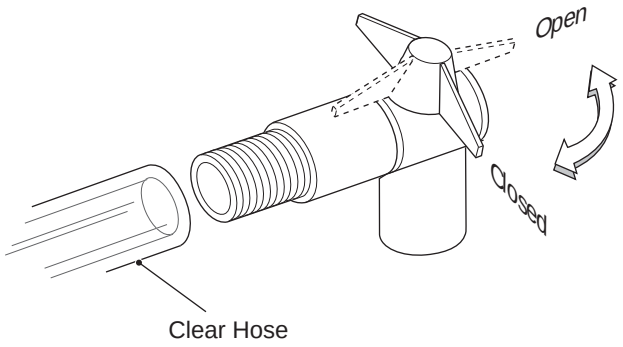

Fig. 3 .Emptying Water from Bins

Exterior Painted Surfaces - The painted surfaces should be cleaned on a daily basis using a soap and water solution.

Exterior Aluminum Surfaces - The aluminum surfaces should also be cleaned on a daily basis using a soap and water solution. Periodic cleaning with an aluminum or stainless steel cleaner is recommended. We recommend ZEP Stainless Steel Polish or equal.

Drains - The drains should be flushed with a hose on a daily basis. Periodically, the drains should be cleaned and sanitized.

Acrylic - The clear acrylic doors should be cleaned daily with a soap and water solution. Dry with a clean damp chamois. Do not use window-cleaning sprays.

Polypropylene - The polypropylene doors should be cleaned daily with a soap and water solution.

Canopy Cover - Periodically hose off the fabric with fresh water and allow to dry on the canopy frame.

Maintenance

The door latches and locks will require periodic tightening, adjusting and lubricating with a silicone spray lubricant. We recommend that this be done every two weeks. Tightening of all screws, nuts and bolts should be accomplished on a regular basis.

REFRESHMENT UNIT REPLACEMENT PARTS

When ordering refreshment unit replacement parts, reference manufacturer's I. D. plate located in trash bin compartment.

Repair or replacement parts for the vending unit are available directly from 19th HOLE MARKETING, INC., 1019 North Colorado Street, Suite 100, Gilbert, AZ 85233; phone (480) 497-8280, FAX (480) 497-8044.

Read all of Section B and this section before attempting any procedure. Pay particular attention to Notices, Cautions, Warnings and Dangers.

NOTES:

Read all of Section B and this section before attempting any procedure. Pay particular attention to Notices, Cautions, Warnings and Dangers.

NOTES:

TABLE OF CONTENTS FOR SECTION 'T'

SECTION TITLE **PAGE NO.**

TROUBLESHOOTING ..... **T - 1**

Gasoline Vehicle Performance ..... **T - 1**
Starter Does Not Turn ..... T - 1
Starter Turns Slowly ..... T - 1
Starter Rotates but Vehicle Doesn't Start or Hard to Start ..... T - 1
Engine Runs Rough or Loss of Power ..... T - 2
Poor Low Speed Performance ..... T - 3
Poor Midrange or High Speed Performance ..... T - 3
Engine Overheating ..... T - 3
Repeated Spark Plug fouling ..... T - 4
Carburetor Floods Engine ..... T - 4
Excessive Smoking ..... T - 4
Backfiring ..... T - 4
Erratic, Surging, or Sudden Change in Governed Speed ..... T - 5

Fuel Accumulation in the Crankcase ..... **T - 5**
Fuel Distribution ..... T - 5
Mechanical ..... T - 5
Operation and Application ..... T - 6

Carburetor ..... **T - 6**
Overflow Leak ..... T - 6
Poor Low Speed Performance ..... T - 6
Poor Fuel Economy ..... T - 6
Poor Acceleration ..... T - 6
Hard Starting ..... T - 6
Poor High Speed Operation ..... T - 7
Abnormal Combustion (Fuel Mixture) ..... T - 7
Loss of Power (Insufficient Fuel) ..... T - 7
Loss of Power (Insufficient Air) ..... T - 7
Surging ..... T - 7

Starter/Generator ..... **T - 7**
Starter is Noisy ..... T - 7
Rectification is Imperfect ..... T - 8
Generator Does Not Charge ..... T - 8

Suspension and Steering ..... **T - 8**
Uneven Tire Wear ..... T - 8
Stiff Steering ..... T - 8
Play in Steering ..... T - 8
Vibration ..... T - 8
Steering Pulls to One Side ..... T - 9

Brake System ..... **T - 9**
Fails Brake Performance Test by Stopping in Longer Distance than Normal ... T - 9
In Excess of 1" Free Pedal Travel (Soft Pedal) ..... T - 9
Less than 3/4" Free Pedal Travel (Hard Pedal) ..... T - 9
Neither Wheel Locks When Park Brake is Latched ..... T - 10
Unequal Braking (One Wheel Locks Other Rotates) ..... T - 10
Neither Wheel Locks ..... T - 10
Grabbing Brakes (Over Sensitive) ..... T - 10
Parking Brake Hard to Latch ..... T - 10
Parking Brake Will Not Stay Latched ..... T - 10

Read all of Section B and this section before attempting any procedure. Pay particular attention to Notices, Cautions, Warnings and Dangers

NOTES:

Read all of Section B and this section before attempting any procedure. Pay particular attention to Notices, Cautions, Warnings and Dangers.

GASOLINE VEHICLE PERFORMANCE

Condition	Possible Cause	Correction
STARTER DOES NOT TURN	Weak or bad battery	Recharge or replace as necessary
	Terminals are loose or corroded	Clean and retighten
	Poor wiring connections	Repair or replace wire and/or connections
	Faulty Ignition Switch	Repair or replace wire and/or connections
	Blown fuse	Investigate cause and replace fuse
	Solenoid faulty	If no audible 'click' is heard, check power and ground. Replace solenoid if power and ground is good
	Accelerator switch	Check continuity
	Starter/generator terminals are loose or corroded	Tighten or clean
	Leads are broken or faulty ground	Check for breaks at bend or joint. Replace cable
	Field coils are open	Replace fields
	Armature coil is open	Replace armature
STARTER TURNS SLOWLY	Terminals are loose or corroded	Retighten or clean
	Weak battery	Charge battery
	Leads are nearly broken or connections are faulty	Check for any defect of leads at bend or joint. Replace wire leads
	Mechanical problem inside starter/generator	Check
	Internal engine damage	Inspect and repair
	Crankcase over filled with oil	Drain and fill to recommended level with approved oil
STARTER ROTATES BUT VEHICLE WILL NOT START OR HARD TO START	Weak Battery	Recharge or replace as necessary
	Corroded or loose battery connections	Clean and tighten battery connections. Apply a coat of battery protectant to terminals
	Check for adequate fuel level	Fill with correct grade gasoline to 1" (2.5 cm) below bottom of filler neck
	No spark at spark plug. Broken or disconnected spark plug wire	Check and replace if required
	Spark plug fouled	Clean or replace
	Broken or disconnected coil wires	Check or replace
	Faulty magneto	Check or replace
	Incorrect spark plug gap/type	Set gap correctly

Read all of Section B and this section before attempting any procedure. Pay particular attention to Notices, Cautions, Warnings and Dangers.

Condition	Possible Cause	Correction
	Fuel pump faulty	Repair or replace
	Fuel line clogged or clamp loose	Clean or replace if required
	Cracked or broken fuel line	Replace with new hose
	Main jet blocked	Clean jet
	Throttle lever motion restricted	Check all linkages
	Dirt or water in fuel line or carburetor	Clean lines and carburetor. Replace filter
	Clogged fuel filter	Check and replace if required
	Incorrect carburetor float setting	Check/Replace float
	Engine flooded	Push choke in. Clean/or replace spark plugs
	Engine fuel starved	Use choke and push in as soon as engine runs smoothly
	Air intake tube is blocked	Repair or clean
	Clogged air filter	Wash or replace as required
	Plugged muffler or pipe	Repair or replace
	Low compression in engine	Check and repair
ENGINE RUNS ROUGH OR LOSS OF POWER	Dirty or clogged air filter element	Replace as required
	Incorrect choke adjustment	Adjust choke
	Dirty or incorrectly gapped spark plug	Clean plug and set gap
	Faulty magneto	Check and/or replace
	Leak in carburetor gasket	Inspect and replace if required
	Faulty ignition wiring	Repair/replace correct wiring
	Spark plug wire	Test and replace if necessary
	Incorrect valve lash	Check and adjust if required
	Weak or damaged valve springs	Replace
	Damaged intake/exhaust valves	Replace
	Incorrect carburetor float setting	Check/Replace float
	Dirt or water in fuel line, carburetor	Clean lines, carburetor and replace filter
	Plugged fuel tank vent	Clean or replace vent cap
	Muffler damaged or plugged	Repair or replace
	Fuel pump vent dirty	Clean and replace if required
	Fuel pump has a ruptured diaphragm	Replace
	Low compression	Check engine
	Poor quality of fuel	Drain and replace with correct clean fuel

Read all of Section B and this section before attempting any procedure. Pay particular attention to Notices, Cautions, Warnings and Dangers.

Condition	Possible Cause	Correction
POOR LOW SPEED PERFORMANCE	Plugged gas tank vent	Clean or repair
	Choke on	Push choke in
	Carburetor float level incorrect	Check/Replace float
	Clutches not shifting out	Replace clutch/clutches
	Fuel pump faulty	Repair or replace
	Insufficient fuel level	Add fuel
	Air leak at carburetor gasket	Repair component
	Spark plug fouled	Clean or replace
	Weak spark	Check magneto
	Incorrect valve lash	Check and adjust
	Belt slipping	Check belt & clutch surfaces Replace belt or clean clutches
	Faulty accelerator adjustment	Check and adjust
	Faulty governor adjustment	Check and adjust
POOR MIDRANGE OR HIGH SPEED PERFORMANCE	Spark plug fouled	Clean or replace
	Weak spark	Check magneto
	Carburetor float not level	Adjust
	Incorrect or plugged main jet	Check size for appropriate altitude. Clean
	Dirty air filter	Clean or replace
	Brake dragging	Perform brake maintenance
	Low compression	Check engine
	Governor not adjusted properly	Adjust
	Faulty accelerator adjustment	Check and adjust
	Faulty governor adjustment	Check and adjust
ENGINE OVERHEATING	Foreign matter in cylinder fins and blower housing	Clean
	Damaged blower housing or fins	Replace
	Damaged or plugged muffler	Repair or replace
	Inadequate oil supply	Check oil system, inspect oil pump, change oil, fill to correct level
	Heavy loads	Lighten load
	Incorrect Fuel	Use correct seasonal blend fuel. Do not use old fuel

TROUBLESHOOTING

Read all of Section B and this section before attempting any procedure. Pay particular attention to Notices, Cautions, Warnings and Dangers.

Condition	Possible Cause	Correction
REPEATED SPARK PLUG FOULING	Wrong spark plug type	Replace with correct spark plug
	Wrong spark plug gap	Check and adjust if required
	Faulty magneto	Check and replace if required
	Excessive ring blow by	Check/replace rings
	Poor quality gasoline	Use correct fuel, check bulk storage tank for proper storage and handling
	Air leak allowing dirt to enter system	Repair
	Choke sticking closed	Repair
	Wrong main jet for conditions (high altitude operations)	Replace with correct altitude jet for conditions
CARBURETOR FLOODS ENGINE	Inlet valve/seat dirty	Clean or replace
	Fuel contamination	Clean fuel system/carburetor
	Incorrect float level	Adjust
	Clogged air filter element	Clean or replace
EXCESSIVE SMOKING	Wrong oil weight	Replace with recommended oil
	Dirty oil	Change
	Crankcase overfilled with oil	Drain and fill to recommended level
	Clogged PCV valve	Replace
	Piston rings worn or broken	Replace
	Valves worn	Replace
	Valve seals or valve guides worn	Replace
BACKFIRING	Accelerator limit switch out of adjustment	Adjust
	Loose muffler or leaking gasket	Repair
	Carburetor throttle lever motion restricted	Repair
	Carburetor throttle lever not closing fully	Adjust
	Throttle stop preventing throttle from closing fully	Adjust
	Incorrect adjustment of accelerator, governor and carburetor linkages	Adjust
	Carburetor throttle lever shaft bent	Replace or rebuild carburetor
	Faulty plug wire	Replace
	Faulty magneto	Replace

Read all of Section B and this section before attempting any procedure. Pay particular attention to Notices, Cautions, Warnings and Dangers.

Condition	Possible Cause	Correction
ERRATIC, SURGING, OR SUDDEN CHANGE IN GOVERNED SPEED	Damaged governor spring	Replace
	Problem with adjustment of accelerator, governor and carburetor linkage	Adjust
	Bent governor arm	Repair or replace
	Bent governor shaft	Replace
	Governor failure within the rear axle	Repair

FUEL ACCUMULATION IN THE CRANKCASE

FUEL DISTRIBUTION	Dirty Carburetor	Clean or replace. Set air/fuel mixture screw to 1.5 turns out from the lightly seated position (No adjustment on CARB?EPA certified engines).
	Clogged carburetor vents	Remove carburetor and clean with solvent
	Carburetor float sticking	Disassemble and correct per the service manual
	Faulty fuel pump	Check for correct output. Verify fuel is not returning through the pulse line. Clean vent screen.
	Faulty accelerator adjustment/function	Correct per the service manual
	Dirty or restricted air filter	Replace and clean air box
	High pressure in the fuel system	Check fuel cap for venting. Make sure carburetor vent tubes are venting
	Over choking or faulty choke setting	Instruct operator or adjust to limit choke to 3/4 blade travel
	Wrong carburetor jet for the altitude	Verify per the altitude chart. Call your tech rep. for more information
MECHANICAL	Faulty Ignition system	Check ignition output per the service manual.
	Low or unbalanced compression	Perform compression or leak down test. Refer to the service manual for the specification.
	Poor valve sealing	Verify by compression or leak down test

Read all of Section B and this section before attempting any procedure. Pay particular attention to Notices, Cautions, Warnings and Dangers.

Condition	Possible Cause	Correction
OPERATION AND APPLICATION	Engine not reaching full temperature	Increase run time intervals to build higher cylinder temperature
	Continuous use at 1/4 throttle or less at low engine speed	Instruct operator
	Wide open throttle cranking	Instruct operator per operator's manual
	Long and continuous down hill use	Down hill use without the accelerator partially depressed will flood the cylinder with fuel due to no ignition present
	Poor fuel quality	Do not use old fuel. Add stabilizer for extended storage. Have fuel tested for contaminants.
	Use of summer blend fuel in the winter	Correct with fresh fuel

CARBURETOR

OVERFLOW/LEAK	Worn inlet valve or dirty valve seat	Replace valve or clean valve seat
	Worn float mounting tang	Replace float
	Worn float pin	Replace pin
	Damaged float bowl gasket	Replace gasket
	Damaged float	Replace float
POOR LOW SPEED PERFORMANCE	Clogged pilot port	Clean pilot port
	Clogged low speed jet	Clean low speed jet
	Loose low speed jet	Tighten jet
POOR FUEL ECONOMY	Loose jets	Tighten jets
	Choke not opening fully	Adjust choke
	Dirty air cleaner	Clean/replace air filter
	Poor fuel quality	Replace with fresh fuel
POOR ACCELERATION	Clogged fuel passages	Clean fuel passages
	Clogged low speed jet or bleed tube	Clean
	Fuel level too low	Adjust float
	Dirty air cleaner	Clean/replace air filter
HARD STARTING	Choke plate not operating properly	Adjust choke system
	Dirty carburetor	Clean carburetor
	Loose carburetor	Tighten carburetor
	Fuel overflow	Inspect float and valve. Repair or replace
	Faulty fuel pump	Replace fuel pump
	Poor fuel quality	Replace with fresh fuel

Read all of Section B and this section before attempting any procedure. Pay particular attention to Notices, Cautions, Warnings and Dangers.

Condition	Possible Cause	Correction
POOR HIGH SPEED OPERATION	Fuel pump faulty	Replace fuel pump
	Loose main jet	Tighten main jet
	Incorrect fuel level in float bowl	Adjust float
	Dirt in fuel tank or hoses	Clean
	Clogged fuel filter	Replace fuel filter
	Clogged main jet or main jet air passage	Clean jet
	Dirty air filter	Clean/replace filter element
ABNORMAL COMBUSTION (FUEL MIXTURE)	Dirty carburetor	Clean carburetor
	Dirt in fuel tank, hoses or filter	Clean or replace
	Clogged air or fuel filter	Replace
	Poor fuel quality	Replace with fresh fuel
LOSS OF POWER (INSUFFICIENT FUEL)	Faulty fuel pump	Replace fuel pump
	Dirty carburetor	Clean carburetor
	Dirt in fuel tank or hoses	Clean
	Clogged fuel filter	Replace fuel filter
	Air leak in system	Check mounting hardware and gaskets. Repair or replace
LOSS OF POWER (INSUFFICIENT AIR)	Dirty air cleaner	Clean/replace filter element
	Throttle linkage	Adjust or Repair
	Blocked air inlet	Clean fuel filter
SURGING	Governor linkage	Refer to SPEED CONTROL section

STARTER / GENERATOR

Condition	Possible Cause	Correction
STARTER IS NOISY	Bolts are loose	Retighten
	Starter/generator has foreign matter inside	Clean starter/generator interior
	Bearings are faulty	Replace
	Bearings contain foreign matter	Replace
	Bearing needs grease	Replace

Read all of Section B and this section before attempting any procedure. Pay particular attention to Notices, Cautions, Warnings and Dangers.

Condition	Possible Cause	Correction
RECTIFICATION IS IMPERFECT	Load exceeds specification	Adjust load to specification
	Armature bent	Repair or replace if necessary
	Brushes are worn beyond limits	Replace
	Commutator is excessively rough	Smooth with emery cloth
	Incorrect voltage output	Check and replace any components if required
	Commutator is dirty with oil or dust	Clean with a cleaner and dry cloth
	Field coil is shorted or broken	Repair or replace
GENERATOR DOES NOT CHARGE	Corroded or loose battery connections	Clean and tighten battery connections
	Incorrect voltage regulator output	Replace
	Poor voltage regulator ground connection	Repair
	Open or short circuit	Repair or replace
	Faulty starter/generator	Repair starter/generator

SUSPENSION AND STEERING

Condition	Possible Cause	Correction
UNEVEN TIRE WEAR	Incorrect tire pressure	Inflate to recommended pressure
	Improper alignment (Incorrect toe in)	Align front tires
	Damaged or worn components	Replace
STIFF STEERING	Rusted or contaminated king pin sleeve or bushings	Replace or clean
	Bent rack	Remove rack and place on flat surface with rack teeth up; If a .015" (.381 mm) feeler gauge will pass under the rack, the rack must be replaced
PLAY IN STEERING	Steering wheel loose	Inspect splines - replace steering wheel if required; Tighten steering wheel nut
	Steering components worn	Replace
	Loose wheel bearings	Adjust or replace
VIBRATION	Steering components worn	Replace
	Loose wheel bearings	Adjust or replace
	Out of round tires, wheels, or brake drums	Inspect and replace if out of round
	Loose lug nuts	Tighten to 50 - 85 ft. lbs. (68 - 115 Nm)

Read all of Section B and this section before attempting any procedure. Pay particular attention to Notices, Cautions, Warnings and Dangers.

Condition	Possible Cause	Correction
STEERING PULLS TO ONE SIDE	Incorrect tire pressure	Inflate to recommended pressure
	Dragging wheel brakes	Service brake system
	Suspension component failure	Repair
	Alignment incorrect	Align

BRAKE SYSTEM

Condition	Possible Cause	Correction
FAILS BRAKE PERFORMANCE TEST BY STOPPING IN A LONGER DISTANCE THAN NORMAL	Wheel brake failure due to severely worn or damaged components	Replace all severely worn or damaged components
	Brake pedal not returning Brake not adjusting	Check for binding of brake pedal Check brake pedal free travel Check brake cables Check brake adjusters Check pedal pivot
	Brake shoes wet	Check again when shoes are dry
	Brake cables damaged or sticky	Check brake cable and replace if sticky or damaged
	Brake shoes severely worn	Replace
	Brake shoes glazed	Sand shoes with emery cloth provided that shoes have .06" (1.5 mm) min. material
	System not adjusted properly	Check and adjust per manual
	End of brake cable loose from anchor brackets	Check and repair
	Cracked brake drum	Replace
IN EXCESS OF 1" (2.5 CM) FREE PEDAL TRAVEL (SOFT PEDAL)	Low pedal force at parking brake latch	Adjust per manual
	Brake cables damaged	Replace
	Brake return bumper out of adjustment	Adjust per manual
	End of brake cable loose from anchor brackets	Check and repair
	Wheel brake failure due to severely worn or damaged components	Replace all severely worn or damaged components
	System not adjusted properly	Adjust per Manual
LESS THAN 3/4" (1.9 CM) FREE PEDAL TRAVEL (HARD PEDAL)	High pedal force at parking brake latch	Adjust per Manual
	Brake cables damaged or sticky	Check brake cable and replace if sticky or damaged
	System not adjusted properly	Check and adjust per manual
	Wheel brake failure due to severely worn or damaged components	Replace all severely worn or damaged components

Read all of Section B and this section before attempting any procedure. Pay particular attention to Notices, Cautions, Warnings and Dangers.

Condition	Possible Cause	Correction
NEITHER WHEEL LOCKS WHEN PARK BRAKE IS LATCHED. (NOTE: AT FULL SPEED THE WHEELS MAY NOT LOCK, BUT SHOULD BRAKE AGGRESSIVELY).	Incorrect cable adjustment	Return to factory specification
	Excessive brake pedal free travel	Adjust per manual
UNEQUAL BRAKING (ONE WHEEL LOCKS WHILE OTHER ROTATES)	Wheel not locking is not adjusting	Check brake operation of wheel that is **not** locking
	Sticky/dragging cable	Check for brake lever return Check that brake levers return at equal rate - (Indication of dragging cable)
	Cracked brake drum	Replace
	Brake shoes wet or glazed	Check again when shoes are dry
	Rusted or sticky brake pivot hardware	Replace
NEITHER WHEEL LOCKS	Brake system requires complete adjustment	Adjust entire system
	Brake pedal not returning	Check for binding of brake pedal Check brake pedal free travel
GRABBING BRAKES (OVERSENSITIVE)	Moisture has caused surface rust on drums	Apply moderate force to pedal while at maximum level ground speed to remove rust until condition is relieved.
	Brake Pivot binding	Check and replace poor components

Read all of Section B and this section before attempting any procedure. Pay particular attention to Notices, Cautions, Warnings and Dangers.

NOTES:

Read all of Section B and this section before attempting any procedure. Pay particular attention to Notices, Cautions, Warnings and Dangers.

NOTES:

TABLE OF CONTENTS FOR SECTION 'V'

SECTION TITLE **PAGE NO.**

SHUTTLE 2 ..... **V - 1**

SHUTTLE 4 ..... **V - 2**

SHUTTLE 6 ..... **V - 3**

REFRESHER 2000 ..... **V - 8**

LIST OF ILLUSTRATIONS

Fig. 1 Vechicle Dimensions (Shuttle 4 and 6) ..... V - 4
Fig. 2 Vehicle Dimensions (Shuttle 2) ..... V - 5
Fig. 3 Vehicle Dimensions, Incline Specifications ..... V - 6
Fig. 4 Turning Clearance Diameter ..... V - 7
Fig. 5 Refresher Vehicle Dimensions ..... V - 9
Fig. 6 Refresher Vehicle Dimensions, Incline Specifications and Turning Clearance Diameter ..... V - 10

Read all of Section B and this section before attempting any procedure. Pay particular attention to Notices, Cautions, Warnings and Dangers.

NOTES:

Read all of Section B and this section before attempting any procedure. Pay particular attention to Notices, Cautions, Warnings and Dangers.

CUSHMAN
A Textron Company

MODEL: SHUTTLE™ 2
TYPE: GASOLINE POWERED CARGO CARRIER
MODEL YEAR: 2012
Part No:. 618849

PRODUCT SPECIFICATION

CONFIGURATION HIGHLIGHTS

Engine: 13 hp (9.7 kW) Exceeds SAE J1940 Standard, 4 cycle, 24.5 ci (401 cc) single cylinder, air-cooled by Kawasaki

- Valve Train: Overhead valve
- Lubrication: Pressurized oil system, spin-on oil filter
- Balancer: Internal counter rotating balance shaft
- Fuel System: Fixed float bowl with remote pulse fuel pump
- Ignition: Electronic spark/magneto
- Air Cleaner: Replaceable dry cartridge

Electrical: Starter/Generator, solid-state regulator, 12 Volt maintenance free battery (425 CCA, 60 minute reserve)
Drive Train: Automatic, continuously variable transmission (CVT)
Brakes: Dual rear wheel mechanical self-adjusting drum brakes.Single point park brake release with self-compensating system
Transaxle: Differential with helical gears, ground speed governor, forward/reverse

PRODUCT OVERVIEW

Dimensions	
Overall Length	138.5 in (352.0 cm)
Overall Width	46.5 in (118.0 cm)
Overall Height (No Canopy)	48.6 in (123.0 cm) (Top of steering wheel)
Overall Height (With Canopy)	74.0 in (188.0 cm)
Wheel Base	93.5 in (237.0 cm)
Front Wheel Track	34.2 in (89.0 cm)
Rear Wheel Track	38.0 in (97.0 cm)
Gnd Clearance @ Differential	4.75 in (12.0 cm)
Cargo Bed Width	44.0 in (112.0 cm)
Cargo Bed Length	68.5 in (174.0 cm)

Vehicle Power	
Power Source	4 Cycle 24.5 cu in (401 cc). Low Emission
Valve Train	Single Cylinder OHV
Horsepower (kW)	13 hp (9.7 kW) Exceeds SAE J1940 Std.
Electrical System	Starter/Generator. Solid State Regulator
Battery (Qty, Type)	One, 12 Volt Maintenance Free
Key or Pedal Start	Pedal
Air Cleaner	Industrial Rated Dry Filter
Lubrication	Pressurized Oil System
Oil Filter	Spin-On
Cooling System	Air Cooled
Fuel Capacity	5.8 Gallon (22.0 L) tank
Drive Train	Continuously variable transmission (CVT)
Transaxle	Differential with helical gears
Gear Selection	Forward - Reverse
Rear Axle Ratio	11.42:1 (Forward) 15.78:1 (Reverse)

Performance	
Seating Capacity	2 Persons
Dry Weight	851 lb (385 kg)
Curb Weight	891 lb (405 kg)
Vehicle load capacity	1200 lb (545 kg)
Outside Clearance Circle	25.5 ft (7.8 m)
Intersecting Aisle Clearance	N/A
Speed (Level Ground)	14 mph ± 0.5 mph (22.5 kph ± 0.8 kph)
Towing Capacity	N/A

Steering & Suspension	
Steering	Self-compensating rack and pinion
Front Suspension	Leaf springs with hydraulic shock absorbers
Rear Suspension	Leaf springs with hydraulic shock absorbers
Service Brake	Rear wheel mechanical self-adjusting drum
Parking Brake	Self-compensating, single point engagement
Front Tires	Links 18 x 8.50 - 8 (4 Ply Rated)
Rear Tires	Links 18 x 8.50 - 8 (4 Ply Rated)

Body & Chassis	
Frame	Welded steel. DuraShield™ powder coat
Front Body & Finish	Injection molded TPO
Rear Body & Finish	Steel. Base coat/clear coat
Standard Color	Champagne

Noise & Vibration	
Noise	Sound pressure; continued A-weighted equal to or less than 76 db(A)
Vibration, WBV	Highest RMS value of weighted acceleration is 1.23 m/s^2
Vibration, HAV	Highest RMS value of weighted acceleration is less than 2.5 m/s^2 The uncertainty of measurement is 0.69 m/s^2

Some items shown may be optional equipment

Specifications are subject to change without notice
* Field installed accessories may require installation charges

GENERAL SPECIFICATIONS

Read all of Section B and this section before attempting any procedure. Pay particular attention to Notices, Cautions, Warnings and Dangers.

CUSHMAN
A Textron Company

MODEL: SHUTTLE™ 4
TYPE: GAS POWERED PERSONNEL CARRIER
MODEL YEAR: 2012
Part No:. 618851

PRODUCT SPECIFICATION

CONFIGURATION HIGHLIGHTS

Engine: 13 hp (9.7 kW) Exceeds SAE J1940 Standard, 4 cycle, 24.5 ci (401 cc) single cylinder, air-cooled by Kawasaki

- Valve Train: Overhead valve
- Lubrication: Pressurized oil system, spin-on oil filter
- Balancer: Internal counter rotating balance shaft
- Fuel System: Fixed float bowl with remote pulse fuel pump
- Ignition: Electronic spark/magneto
- Air Cleaner: Replaceable dry cartridge

Electrical: Starter/Generator, solid-state regulator, 12 Volt maintenance free battery (425 CCA, 60 minute reserve)
Drive Train: Automatic, continuously variable transmission (CVT)
Brakes: Dual rear wheel mechanical self-adjusting drum brakes.Single point park brake release with self-compensating system
Transaxle: Differential with helical gears, ground speed governor, forward/reverse

PRODUCT OVERVIEW

Dimensions	
Overall Length	133.5 in (339.0 cm)
Overall Width	46.5 in (119.0 cm)
Overall Height (No Canopy)	48.6 in (123.0 cm) (Top of steering wheel)
Overall Height (With Canopy)	72.0 in (183.0 cm)
Wheel Base	93.5 in (237.0 cm)
Front Wheel Track	34.2 in (86.7 cm)
Rear Wheel Track	38.0 in (97.0 cm)
Gnd Clearance @ Differential	4.3 in (11.0 cm)
Cargo Box Width (inside)	42.5 in (108.0 cm)
Cargo Box Length (inside)	32.0 in (80.0 cm)
Cargo Box Depth (inside)	11.5 in (29.0 cm)
Cargo Box Capacity	9 cu ft (.25.0 m3)
Cargo Box material	Wood Stake Sides

Vehicle Power	
Power Source	4 Cycle 24.5 cu in (401 cc). Low Emission
Valve Train	Single Cylinder OHV
Horsepower (kW)	13 hp (9.7 kW) Exceeds SAE J1940 Std.
Electrical System	Starter/Generator. Solid State Regulator
Battery (Qty, Type)	One, 12 Volt Maintenance Free
Key or Pedal Start	Pedal
Air Cleaner	Industrial Rated Dry Filter
Lubrication	Pressurized Oil System
Oil Filter	Spin-On
Cooling System	Air Cooled
Fuel Capacity	5.8 Gallon (22.0 L) tank
Drive Train	Continuously variable transmission (CVT)
Transaxle	Differential with helical gears
Gear Selection	Forward - Reverse
Rear Axle Ratio	11.42:1 (Forward) 15.78:1 (Reverse)

Performance	
Seating Capacity	4 Person
Dry Weight	896 lb (405 kg)
Curb Weight	936 lb (425 kg)
Bed Load Capacity	400 lb (180 kg)
Vehicle load capacity	1200 lb (540 kg)
Outside Clearance Circle	25.5 ft (7.8 m)
Intersecting Aisle Clearance	N/A
Speed (Level Ground)	14 mph ± 0.5 mph (22.5 kph ± 0.8 kph)
Towing Capacity	N/A

Steering & Suspension	
Steering	Self-compensating reduction rack and pinion
Front Suspension	Leaf springs with hydraulic shock absorbers
Rear Suspension	Leaf springs with hydraulic shock absorbers
Service Brake	Rear wheel mechanical self-adjusting drum
Parking Brake	Self-compensating, single point engagement
Front Tires	Links 18 x 8.50 - 8 (4 Ply Rated)
Rear Tires	Links 18 x 8.50 - 8 (4 Ply Rated)

Body & Chassis	
Frame	Welded steel. DuraShield™ powder coat
Front & Rear Body & Finish	Injection molded TPO
Seat Pod & Finish	Fiberglass & Gelcoat
Standard Color	Champagne

Noise & Vibration	
Noise	Sound pressure; continued A-weighted equal to or less than 76 db(A)
Vibration, WBV	Highest RMS value of weighted acceleration is 1.23 m/s^2
Vibration, HAV	Highest RMS value of weighted acceleration is less than 2.5 m/s^2
	The uncertainty of measurement is 0.69 m/s^2

Some items shown may be optional equipment

Specifications are subject to change without notice
* Field installed accessories may require installation charges

Read all of Section B and this section before attempting any procedure. Pay particular attention to Notices, Cautions, Warnings and Dangers.

CUSHMAN
A Textron Company

MODEL: SHUTTLE™ 6
TYPE: GAS POWERED PERSONNEL CARRIER
MODEL YEAR: 2012
Part No:. 618853

PRODUCT SPECIFICATION

CONFIGURATION HIGHLIGHTS

Engine: 13 hp (9.7 kW) Exceeds SAE J1940 Standard, 4 cycle, 24.5 ci (401 cc) single cylinder, air-cooled by Kawasaki

- Valve Train: Overhead valve
- Lubrication: Pressurized oil system, spin-on oil filter
- Balancer: Internal counter rotating balance shaft
- Fuel System: Fixed float bowl with remote pulse fuel pump
- Ignition: Electronic spark/magneto
- Air Cleaner: Replaceable dry cartridge

Electrical: Starter/Generator, solid-state regulator, 12 Volt maintenance free battery (425 CCA, 60 minute reserve)
Drive Train: Automatic, continuously variable transmission (CVT)
Brakes: Dual rear wheel mechanical self-adjusting drum brakes.Single point park brake release with self-compensating system
Transaxle: Differential with helical gears, ground speed governor, forward/reverse

PRODUCT OVERVIEW

Dimensions	
Overall Length	133.5 in (339.0 cm)
Overall Width	46.5 in (119.0 cm)
Overall Height (No Canopy)	48.6 in (123.0 cm) (Top of steering wheel)
Overall Height (With Canopy)	72.0 in (183.0 cm)
Wheel Base	93.5 in (237.0 cm)
Front Wheel Track	34.2 in (86.7 cm)
Rear Wheel Track	38.0 in (97.0 cm)
Gnd Clearance @ Differential	4.3 in (11.0 cm)

Vehicle Power	
Power Source	4 Cycle 24.5 cu in (401 cc). Low Emission
Valve Train	Single Cylinder OHV
Horsepower (kW)	13 hp (9.7 kW) Exceeds SAE J1940 Std.
Electrical System	Starter/Generator. Solid State Regulator
Battery (Qty, Type)	One, 12 Volt Maintenance Free
Key or Pedal Start	Pedal
Air Cleaner	Industrial Rated Dry Filter
Lubrication	Pressurized Oil System
Oil Filter	Spin-On
Cooling System	Air Cooled
Fuel Capacity	5.8 Gallon (22.0 L) tank
Drive Train	Continuously variable transmission (CVT)
Transaxle	Differential with helical gears
Gear Selection	Forward - Reverse
Rear Axle Ratio	11.42:1 (Forward) 15.78:1 (Reverse)

Performance	
Seating Capacity	6 Person
Dry Weight	896 lb (405 kg)
Curb Weight	936 lb (425 kg)
Vehicle load capacity	1200 lb (540 kg)
Outside Clearance Circle	25.5 ft (7.8 m)
Speed (Level Ground)	14 mph ± 0.5 mph (22.5 kph ± 0.8 kph)
Towing Capacity	N/A

Steering & Suspension	
Steering	Self-compensating reduction rack and pinion
Front Suspension	Leaf springs with hydraulic shock absorbers
Rear Suspension	Leaf springs with hydraulic shock absorbers
Service Brake	Rear wheel mechanical self-adjusting drum
Parking Brake	Self-compensating, single point engagement
Front Tires	Links 18 x 8.50 - 8 (4 Ply Rated)
Rear Tires	Links 18 x 8.50 - 8 (4 Ply Rated)

Body & Chassis	
Frame	Welded steel. DuraShield™ powder coat
Front & Rear Body & Finish	Injection molded TPO
Seat Pod & Finish	Fiberglass & Gelcoat
Standard Color	Champagne

Noise & Vibration	
Noise	Sound pressure; continued A-weighted equal to or less than 76 db(A)
Vibration, WBV	Highest RMS value of weighted acceleration is 1.23 m/s^2
Vibration, HAV	Highest RMS value of weighted acceleration is less than 2.5 m/s^2 The uncertainty of measurement is 0.69 m/s^2

Some items shown may be optional equipment

Specifications are subject to change without notice
* Field installed accessories may require installation charges

Read all of Section B and this section before attempting any procedure. Pay particular attention to Notices, Cautions, Warnings and Dangers.

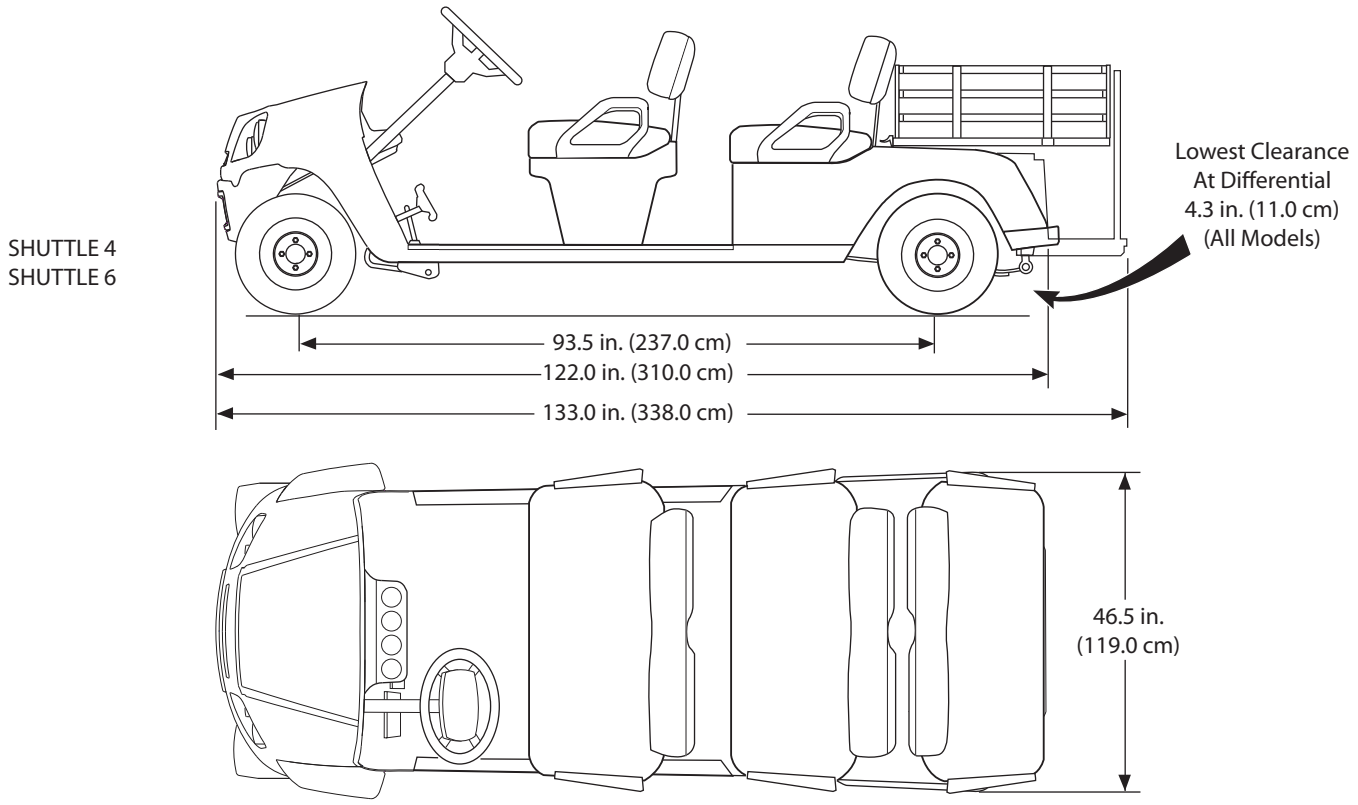

Fig. 1 Vechicle Dimensions (Shuttle 4 and 6)

Read all of Section B and this section before attempting any procedure. Pay particular attention to Notices, Cautions, Warnings and Dangers.

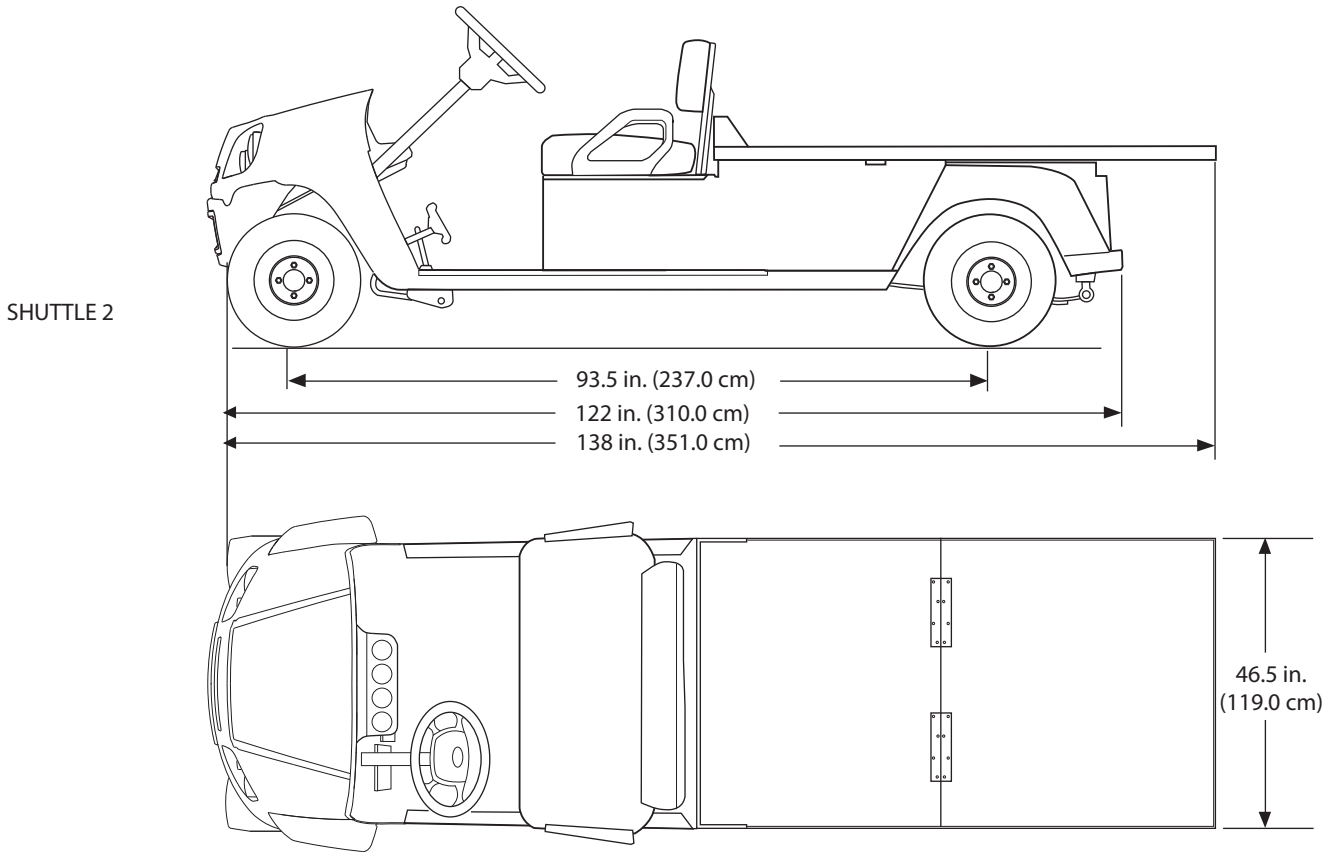

Fig. 2 Vechicle Dimensions (Shuttle 2)

Read all of Section B and this section before attempting any procedure. Pay particular attention to Notices, Cautions, Warnings and Dangers.

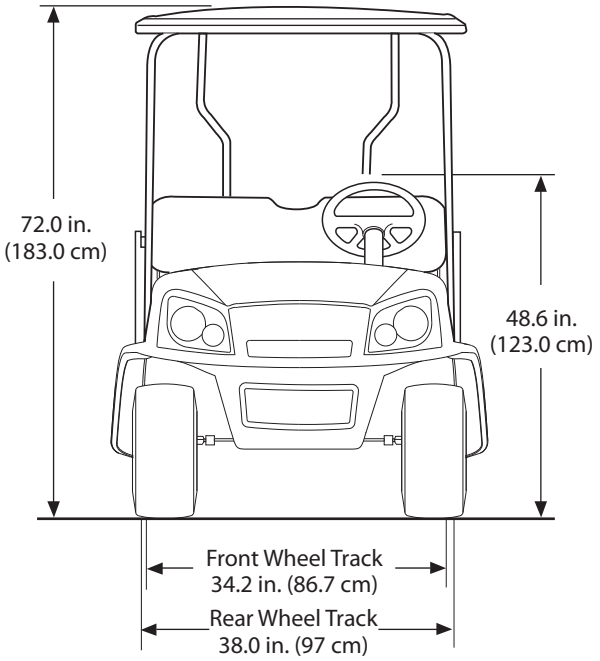

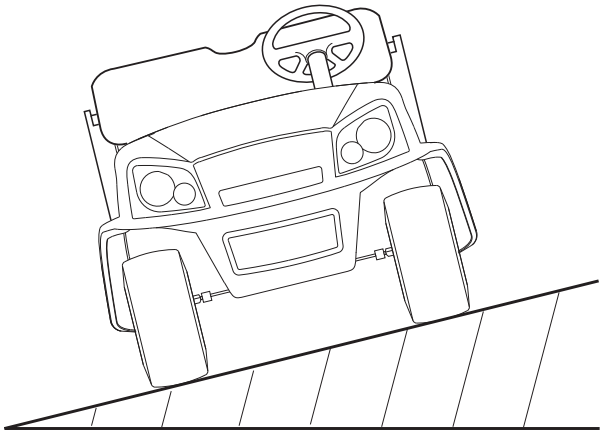

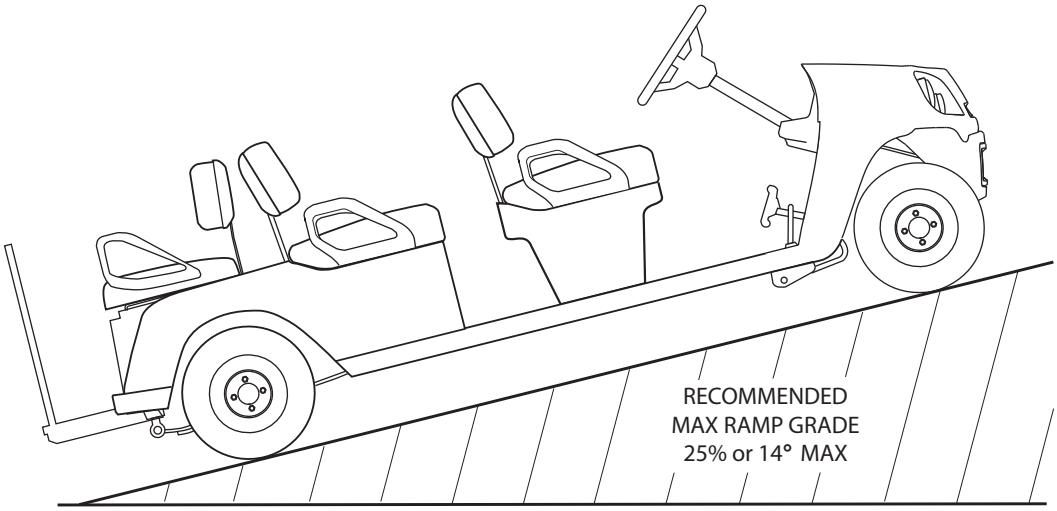

Fig. 3 Vechicle Dimensions, Incline Specifications

Read all of Section B and this section before attempting any procedure. Pay particular attention to Notices, Cautions, Warnings and Dangers.

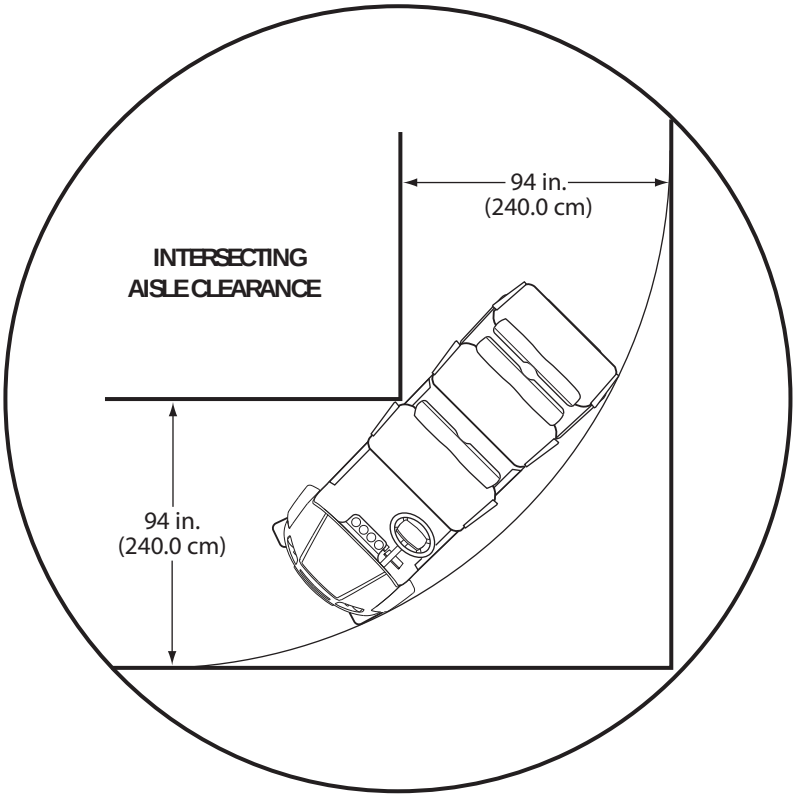

Fig. 4 Turning Clearance Diameter

Read all of Section B and this section before attempting any procedure. Pay particular attention to Notices, Cautions, Warnings and Dangers.

CUSHMAN
A Textron Company

MODEL: REFRESHER 2000
TYPE: GASOLINE POWERED REFRESHMENT VEHICLE
MODEL YEAR: 2012
Part No: 618845

PRODUCT SPECIFICATION

CONFIGURATION HIGHLIGHTS

Engine: 13 hp (9.7 kW) Exceeds SAE J1940 Standard, 4 cycle, 24.5 ci (401 cc) single cylinder, air-cooled by Kawasaki

- Valve Train: Overhead valve
- Lubrication: Pressurized oil system, spin-on oil filter
- Balancer: Internal counter rotating balance shaft
- Fuel System: Fixed float bowl with remote pulse fuel pump
- Ignition: Electronic spark/magneto
- Air Cleaner: Replaceable dry cartridge

Electrical: Starter/Generator, solid-state regulator, 12 Volt maintenance free battery (425 CCA, 60 minute reserve)
Drive Train: Automatic, continuously variable transmission (CVT)
Brakes: Dual rear wheel mechanical self-adjusting drum brakes. Automatic single point park brake release with self-compensating system
Transaxle: Limited Slip Differential with helical gears, ground speed governor, forward/reverse
Canopy: Sunbrella® Signature Series
Beverage Unit: 5000 Series Aluminum - Polyurethane Semi-Gloss Paint. Visible Product Doors with Locks
Beverage Unit Storage Capacity:

- Cold Storage Cabinets: 3
- Beverages: 12 oz cans: 887 or 20 oz bottles: 400
- Trash Bin Volume: 1.3 cu ft (0.04 m3)
- Accessory Mounting Area: 69.0 in (175.0 cm) L x 23.20 in (60.0 cm) W

PRODUCT OVERVIEW

Dimensions

Overall Length	147.0 in (366.0 cm)
Overall Width	50.8 in (128.0 cm)
Overall Height (No Canopy)	48.6 in (123.0 cm) (Top of steering wheel)
Overall Height (With Canopy)	80.3 in (204.0 cm)
Wheel Base	93.5 in (235.0 cm)
Front Wheel Track	36.5 in (93.0 cm)
Rear Wheel Track	38.0 in (97.0 cm)
Gnd Clearance @ Differential	4.0 in (10 cm)

Performance

Seating Capacity	1 Person Std, 2 Persons Optional
Dry Weight	994.0lb (451.0 kg)
Curb Weight	1032.0 lb (474.0 kg)
Vehicle load capacity	2000.0 lb (907.0 kg)
Outside Clearance Circle	27.0 ft (7.8 m)
Intersecting Aisle Clrnce	N/A
Speed (Level Ground)	Fwd - 13.5 mph ± 0.5 mph (21.7 kph ± 0.8 kph) Rev - 9.5 mph ± 0.5 mph (15.3 kph ± 0.8 kph)
Towing Capacity	N/A

Vehicle Power

Power Source	4 Cycle 24.5 cu in (401 cc).
Motor Type	Single Cylinder OHV
Horsepower (kW)	13 hp (9.7 kW) Exceeds SAE J1940 Std.
Electrical System	Starter/Generator. Solid State Regulator
Batteries (Qty, Type)	One, 12 Volt Maintenance Free
Key or Pedal Start	Pedal
Air Cleaner	Industrial Rated Dry Filter
Lubrication	Pressurized Oil System
Oil Filter	Spin-On
Cooling System	Air Cooled
Fuel Capacity	6.2 Gallon (23.5 L) tank
Drive Train	Continuously variable transmission (CVT)
Transaxle	Limited Slip Differential with helical gears
Gear Selection	Forward - Reverse
Rear Axle Ratio	11.42:1 (Forward) 15.78:1 (Reverse)

Steering & Suspension

Steering	Self-compensating rack and pinion
Front Suspension	Leaf springs with hydraulic shock absorbers
Rear Suspension	Heavy Duty leaf springs with hydralic shocks
Service Brake	4 Wheel hydraulic front disc/rear drum
Parking Brake	Mechanical hand brake
Front Tires	Trail 18 x 8.50 - 8 (4 Ply Rated)
Rear Tires	Trail 18 x 9.50 - 8 (6 Ply Rated)

Body & Chassis

Frame	Welded steel with DuraShield™ powder coat
Front Body & Finish	Injection molded TPO
Rear Body & Finish	Steel. Base coat/clear coat
Standard Color	Hunter Green

Some items shown may be optional equipment

Specifications are subject to change without notice
* Field installed accessories may require installation charges

Read all of Section B and this section before attempting any procedure. Pay particular attention to Notices, Cautions, Warnings and Dangers.

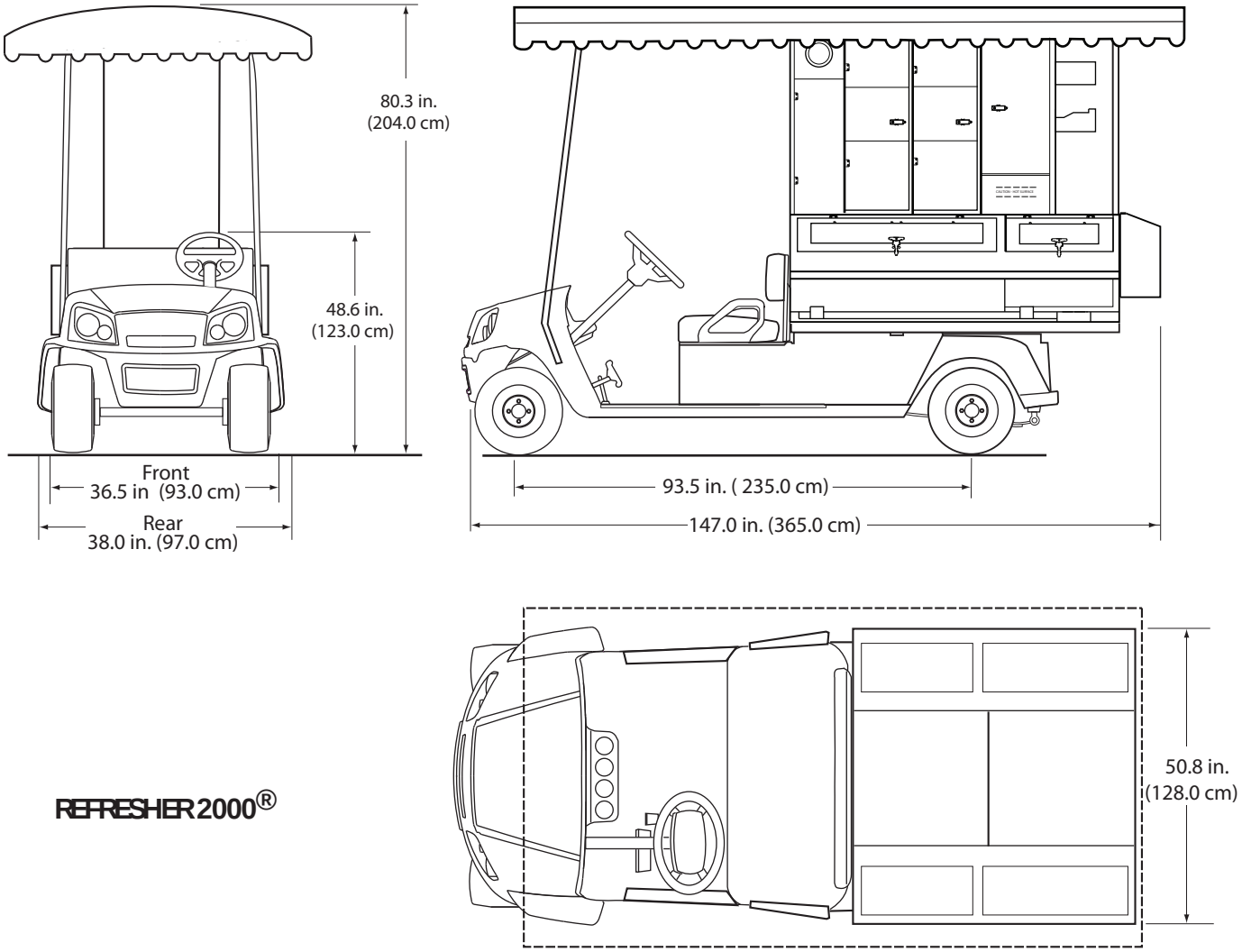

Fig. 5 Refresher Vechicle Dimensions

Read all of Section B and this section before attempting any procedure. Pay particular attention to Notices, Cautions, Warnings and Dangers.

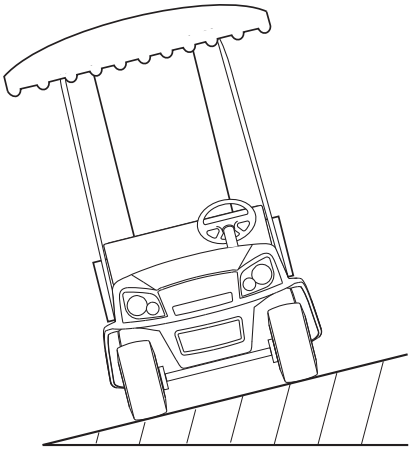

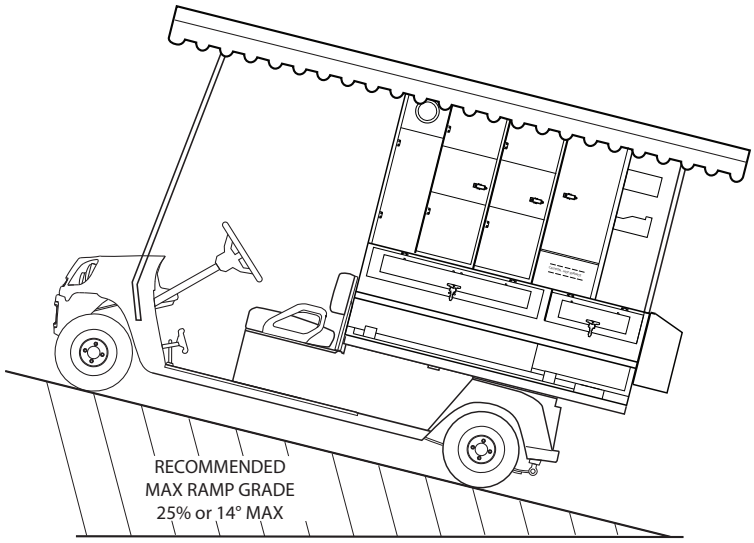

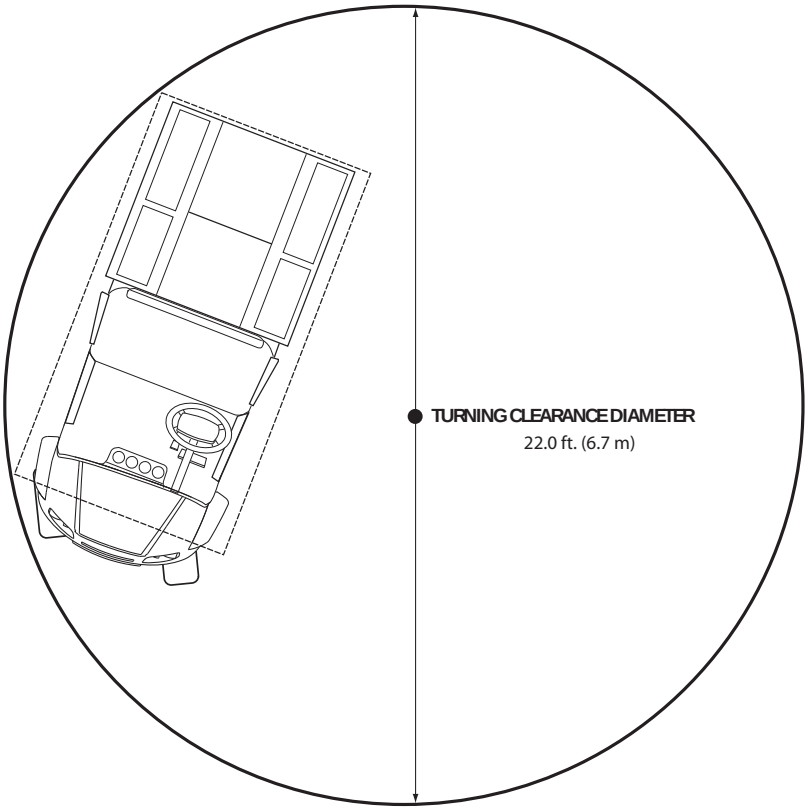

Fig. 6 Refresher Vechicle Dimensions, Incline Specifications and Turning Clearance Diameter

Read all of Section B and this section before attempting any procedure. Pay particular attention to Notices, Cautions, Warnings and Dangers.

NOTES:

Read all of Section B and this section before attempting any procedure. Pay particular attention to Notices, Cautions, Warnings and Dangers.

NOTES:

NOTICE

Read the following warnings before attempting to operate the vehicle:

⚠ WARNING

To prevent personal injury or death, observe the following:

When vehicle is to be left unattended, engage parking brake, move direction selector to 'F' (forward) position, turn key to 'OFF' position and remove key.

Drive vehicle only as fast as terrain and safety considerations allow. Consider the terrain and traffic conditions. Consider environmental factors which effect the terrain and the ability to control the vehicle.

Avoid driving fast down hill. Sudden stops or change of direction may result in a loss of control. Use service brake to control speed when traveling down an incline.

Use extra care and reduced speed when driving on poor surfaces, such as loose dirt, wet grass, gravel, etc.

All travel should be directly up or down hills.

Use extra care when driving the vehicle across an incline.

Stay in designated areas and avoid steep slopes. Use the parking brake whenever the vehicle is parked.

Keep feet, legs, hands and arms inside vehicle at all times.

Avoid extremely rough terrain.

Check area behind the vehicle before operating in reverse.

Make sure the direction selector is in correct position before attempting to start the vehicle.

Slow down before and during turns. All turns should be executed at reduced speed.

Always bring vehicle to a complete stop before shifting the direction selector.

See GENERAL SPECIFICATIONS for vehicle load and seating capacity.

NOTICE

Read the following text and warnings before attempting to service vehicle:

In any product, components will eventually fail to perform properly as the result of normal use, age, wear or abuse.

It is virtually impossible to anticipate all possible component failures or the manner in which each component may fail.

Be aware that a vehicle requiring repair indicates that the vehicle is no longer functioning as designed and therefore should be considered potentially hazardous. Use extreme care when working on any vehicle. When diagnosing, removing or replacing any components that are not operating correctly, take time to consider the safety of yourself and others around you should the component move unexpectedly.

Some components are heavy, spring loaded, highly corrosive, explosive or may produce high amperage or reach high temperatures. Gasoline, carbon monoxide, battery acid and hydrogen gas could result in serious bodily injury to the technician/mechanic and bystanders if not treated with the utmost caution. Be careful not to place hands, face, feet or body in a location that could expose them to injury should an unforeseen situation occur.

Always use the appropriate tools listed in the tool list and wear approved safety equipment.

⚠ WARNING

Before working on the vehicle, remove all jewelry (rings, watches, necklaces, etc.)

Be sure that no loose clothing or hair can contact moving parts.

Use care not to touch hot objects.

Raise rear of vehicle and support on jack stands before attempting to run or adjust powertrain.

Wear eye protection when working on or around vehicle. In particular, use care when working around batteries, using solvents or compressed air.

Hydrogen gas is formed when charging batteries. Do not charge batteries without adequate ventilation.

Do not permit open flame or anyone to smoke in an area that is being used for charging batteries. A concentration of 4% hydrogen gas or more is explosive.

Engine exhaust gas (carbon monoxide) is deadly. Carbon monoxide is an odorless, colorless gas that is formed as a natural part of incomplete combustion of hydrocarbon fuels. Carbon monoxide is a dangerous gas that can cause unconsciousness and is potentially lethal.

The following are symptoms of carbon monoxide inhalation:

- *Dizziness*
- *Vomiting*
- *Intense headache*
- *Muscular twitching*
- *Weakness and sleepiness*
- *Throbbing in temples*

If any of these symptoms are experienced, get fresh air immediately. Never work around or operate a vehicle in an environment that does not ventilate exhaust gases from the area.

CUSHMAN™

E-Z-GO Division of Textron Inc.,
1451 Marvin Griffin Road, Augusta, Georgia 30906 - 3852 USA

TO CONTACT US...
North America:

Technical Assistance & Warranty	Phone: 1-800-774-3946, FAX: 1-800-448-8124
Service Parts	Phone: 1-888-GET-E-Z-GO (1-888-438-3946), FAX: 1-800-752-6175
International:	Phone: 001-706-798-4311, FAX: 001-706-771-4609

Service Parts Manuals, as well as Repair and Service Manuals
are available from a local Distributor, an authorized Branch,
Genuine E-Z-GO Parts & Accessories Department or at www.shopezgo.com.

Copyrighted Material
This manual may not be reproduced in whole or
in part without the express permission of
E-Z-GO Division of Textron Inc.
Technical Communications Department