YAMAHA

MODEL YEAR
ANNÉE MODÈLE
MODELLJAHR
AÑO DEL MODELO
ANO DO MODELO
2027

OWNER'S / OPERATOR'S MANUAL
MANUEL DU PROPRIÉTAIRE / CONDUCTEUR
BEDIENUNGS- / BETRIEBSANLEITUNG
MANUAL DEL PROPIETARIO / USUARIO
MANUAL DO PROPRIETÁRIO / OPERADOR

PERSONAL TRANSPORT VEHICLE
VÉHICULE DE TRANSPORT PERSONNEL
PERSONENTRANSPORTFAHRZEUG
VEHÍCULO DE TRANSPORTE PERSONAL
VEÍCULO DE TRANSPORTE PESSOAL

- Read this manual carefully before operating this vehicle.
- Il convient de lire attentivement ce manuel avant la première utilisation du véhicule.
- Bitte lesen Sie diese Bedienungsanleitung sorgfältig durch, bevor Sie das Fahrzeug in Betrieb nehmen.
- Lea este manual atentamente antes de utilizar este vehículo.
- Leia este manual com atenção antes de operar este veículo.

DRIVE2

AC POWERTECH IRS INDEPENDENT REAR SUSPENSION

DR2 PTV
POWERTECH AC IRS

LIT-19626-A8-04

J0E-F8199-3C

Original instructions
Notice originale
Originalbetriebsanleitung
Manual original
Instruções originais

YAMAHA

PRINTED IN USA
2026.07-0.3×1 CR
(E, F, G, S, W)

YAMAHA

MODEL YEAR 2027

OWNER'S / OPERATOR'S MANUAL

PERSONAL TRANSPORT VEHICLE

⚠ **Read this manual carefully before operating this vehicle.**

DRIVE2 AC POWERTECH IRS INDEPENDENT REAR SUSPENSION

DR2 PTV POWERTECH AC IRS

LIT-19626-A8-04

J0E-F8199-3C-E0

EU Declaration of Conformity

conforming to Regulation (EU) 2023/1230

We YAMAHA MOTOR CO., LTD
2500 Shingai, Iwata, Shizuoka, Japan

declare in sole responsibility, that the product

DR2E27 PTV (J0E-1000101～)

to which this declaration applies, conforms to the essential health and safety requirements of Regulation (EU) 2023/1230

and to the other relevant Directive of EU.

2014/30/EU

(if applicable)

To effect correct application of the essential health and safety requirements stated in the Regulation of EU, the following-standards and/or technical specifications were consulted:

ANSI Z535.4-2011, ANSI Z130.1-2020, ANSI Z135-2020

Authorized Representative
YAMAHA MOTOR EUROPE N.V.
Koolhovenlaan 101,1119 NC Schiphol-Rijk, The Netherlands

Shizuoka, Japan 15 April 2026

Product Development Div.
Engineering Section

M. Horikawa.

Makoto Horikawa

UKCA Declaration of Conformity

conforming to The Supply of Machinery (Safety) Regulations 2008

We YAMAHA MOTOR CO., LTD
2500 Shingai, Iwata, Shizuoka, Japan

declare in sole responsibility, that the product

DR2E27 PTV (J0E-1000101～)

to which this declaration applies, conforms to the essential health and safety requirements of
The Supply of Machinery (Safety) Regulations 2008
and to the other relevant regulations of UKCA.

Electromagnetic Compatibility Regulations 2016

(if applicable)

To effect correct application of the essential health and safety requirements stated in the regulations of UKCA, the following-standards and/or technical specifications were consulted:

ANSI Z535.4-2011, ANSI Z130.1-2020, ANSI Z135-2020

Authorized Representative in United Kingdom
YAMAHA MOTOR EUROPE N.V., BRANCH UK
Units A2-A3, Kingswey Business Park,Forsyth Road
Woking, SY. GU21 5SA, United Kingdom

Shizuoka, Japan 15 April 2026

Product Development Div.
Engineering Section

M. Horikawa.

Makoto Horikawa

IMPORTANT PRODUCT INFORMATION

The United States Export Control

You will recognize that the Product is manufactured in the United States. Therefore, you may not use, export or reexport the Product except as authorized by the United States laws and the laws of the jurisdiction(s) in which the Product was obtained. The Product is subject to the United States export control laws. In particular, but without limitation, the Product may not be exported or reexported, whether directly or indirectly:

(a) into any U.S. embargoes or economic sanctioned countries or;

(b) to anyone on the U.S. Denied Persons List or Entity List or;

(c) to anyone on the U.S. Specially Designated Nationals List, Specially Designated Terrorists List or Specially Designated Narcotic Traffickers List.

INTRODUCTION

Congratulations on your purchase of a Yamaha Personal Transport Vehicle (PTV). This manual contains information you will need for proper operation, maintenance, and care of your PTV. A thorough understanding of these simple instructions will help you to obtain maximum enjoyment from your new Yamaha.
If you have any questions about the operation or maintenance of your PTV, please consult a Yamaha dealer.

Yamaha Motor Co., Ltd.

DR2 PTV POWERTECH AC IRS
OWNER'S/OPERATOR'S MANUAL
© 2027 by Yamaha Motor Co., Ltd.
1st edition, May 2026
All rights reserved. Any reprinting or unauthorized use without the written permission of Yamaha Motor Co., Ltd. is expressly prohibited.
Printed in U.S.A.
LIT-19626-A8-04

IMPORTANT MANUAL INFORMATION

Particularly important information is distinguished in this manual by the following notations:

⚠	**This is the safety alert symbol. It is used to alert you to potential personal injury hazards. Obey all safety messages that follow this symbol to avoid possible injury or death.**
⚠ **WARNING**	**A WARNING indicates a hazardous situation which, if not avoided, could result in death or serious injury.**
NOTICE	**A NOTICE indicates special precautions that must be taken to avoid damage to the vehicle or other property.**
TIP	A TIP provides key information to make procedures easier or clearer.

TIP

Yamaha continually seeks advancements in product design and quality; therefore, while this manual contains the most current product information available at the time of printing, there may be minor discrepancies between your PTV and this manual. If you have any questions concerning this manual, please consult your Yamaha dealer.

⚠ WARNING

Read and understand this manual completely before operating your PTV. This manual should be considered a permanent part of your PTV and should remain with the PTV when resold.

Battery recycling and disposal

- Dispose of the used batteries according to local regulations and recycling guidelines.
- Do not dispose of batteries with household waste.
- To prevent short circuits, cover the battery terminals with adhesive tape.
- When returning batteries, return them to the authorized dealer where you purchased them.
- Please consult authorized dealer or visit to battery company website for information on the effects of contained substances of batteries.

IMPORTANT MANUAL INFORMATION

Symbol	
	Do not dispose of batteries with household waste.
	Batteries are recyclable. Follow the local regulations and recycling guidelines.
Pb	Batteries containing more than 0.004% Pb.

CONTENTS

CONTENTS

IMPORTANT LABELS 1

⚠ SAFETY INFORMATION 2

CONTROLS 3

PRE-OPERATION CHECKS 4

OPERATION 5

MAINTENANCE AND ADJUSTMENT 6

STORAGE 7

SPECIFICATIONS 8

WIRING 9

IMPORTANT LABELS

⚠ SAFETY AND INSTRUCTION LABELS

Read the following labels carefully before operating your PTV. If any of these labels are damaged or missing, contact a Yamaha dealer for replacements.

1

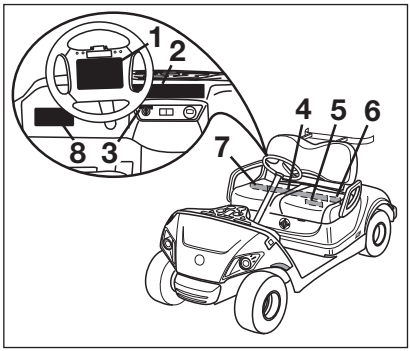

1

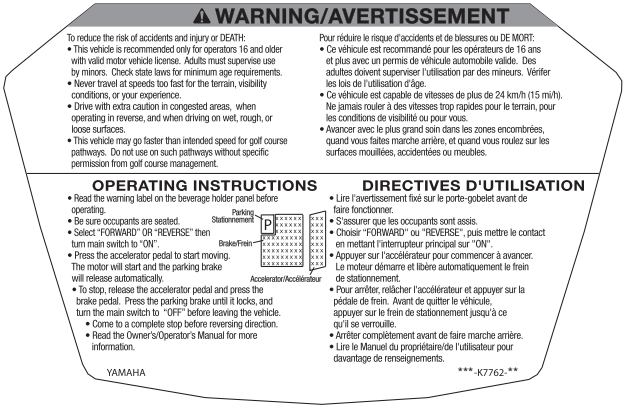

⚠ WARNING/AVERTISSEMENT

To reduce the risk of accidents and injury or DEATH:
- This vehicle is recommended only for operators 16 and older with valid motor vehicle license. Adults must supervise use by minors. Check state laws for minimum age requirements.
- Never travel at speeds too fast for the terrain, visibility conditions, or your experience.
- Drive with extra caution in congested areas, when operating in reverse, and when driving on wet, rough, or loose surfaces.
- This vehicle may go faster than intended speed for golf course pathways. Do not use on such pathways without specific permission from golf course management.

Pour réduire le risque d'accidents et de blessures ou DE MORT:
- Ce véhicule est recommandé pour les opérateurs de 16 ans et plus avec un permis de véhicule automobile valide. Des adultes doivent superviser l'utilisation par des mineurs. Vérifier les lois de l'utilisation d'âge.
- Ce véhicule est capable de vitesses de plus de 24 km/h (15 mi/h). Ne jamais rouler à des vitesses trop rapides pour le terrain, pour les conditions de visibilité ou pour vous.
- Avancer avec le plus grand soin dans les zones encombrées, quand vous faites marche arrière, et quand vous roulez sur les surfaces mouillées, accidentées ou meubles.

OPERATING INSTRUCTIONS
- Read the warning label on the beverage holder panel before operating.
- Be sure occupants are seated.
- Select "FORWARD" OR "REVERSE" then turn main switch to "ON".
- Press the accelerator pedal to start moving. The motor will start and the parking brake will release automatically.
- To stop, release the accelerator pedal and press the brake pedal. Press the parking brake until it locks, and turn the main switch to "OFF" before leaving the vehicle.
  - Come to a complete stop before reversing direction.
  - Read the Owner's/Operator's Manual for more information.

Parking
Stationnement
Brake/Frein
Accelerator/Accélérateur

DIRECTIVES D'UTILISATION
- Lire l'avertissement fixé sur le porte-gobelet avant de faire fonctionner.
- S'assurer que les occupants sont assis.
- Choisir "FORWARD" ou "REVERSE", puis mettre le contact en mettant l'interrupteur principal sur "ON".
- Appuyer sur l'accélérateur pour commencer à avancer. Le moteur démarre et libère automatiquement le frein de stationnement.
- Pour arrêter, relâcher l'accélérateur et appuyer sur la pédale de frein. Avant de quitter le véhicule, appuyer sur le frein de stationnement jusqu'à ce qu'il se verrouille.
- Arrêter complètement avant de faire marche arrière.
- Lire le Manuel du propriétaire/de l'utilisateur pour davantage de renseignements.

YAMAHA

***-K7762-**

2

⚠ WARNING/AVERTISSEMENT

To reduce the risk of accidents and injury or DEATH:
- Read the label located on the steering wheel before operation.
- Operate only when authorized and only in designated areas.
- Operate from driver's seat only.
- This vehicle is restricted to 2 occupants per bench seat.
- Do not start vehicle until all occupants are seated.
- Remain seated and hold on when in motion.
- Keep entire body inside vehicle.
- Drive slowly in turns.
- Drive straight up and down slopes.
- Set parking brake before leaving vehicle.
- Turn main switch to "OFF" and remove key when not in use.
- Do not operate or ride while distracted or under the influence of alcohol or drugs.

DRIVER UNDER 16

YAMAHA ***-K7768-**

Pour réduire le risque d'accidents et de blessures ou DE MORT:
- Lisez l'étiquette située sur le volant avant l'utilisation.
- Utiliser seulement lorsque lusage est autorisé et dans les zones designées.
- Ne conduire qu'en étant assis sur le siège du conducteur.
- Ce véhicule est limité à 2 occupants par banquette.
- Ne pas démarrer avant que tous les occupants soien.
- Rester assis et bien se tenir quand le véhicule est en marche.
- Garder toute partie du corps dans le véhicule.
- Conduire lentement dans les virages.
- Conduisez directement en montée et en descente.
- Tourner l'interrupteur principal à "OFF" et enlever la clé quand le véhicule n'est pas utilisé.
- N'utilisez pas/n'occupez pas le véhicule lorsque vous êtes distrait ou sous l'influence de l'alcool ou de drogues.

PILOTE DE MOINS DE 16

3

4

5

NOTICE

Move switch to the "TOW" position before towing or storage. Failure to do so may lead to:
- Drive system damage when towing.
- Complete battery discharge and battery damage when storing long term.
- After moving switch from "RUN" to "TOW", wait 15 seconds minimum before switching again.

NOTIFICATION

Mettre l'interrupteur a position "TOW" avant de remorquer ou avant l'entreposage. Non-observation pourrait:
- Dommages de système d'entrainement en remourquant.
- Causer une decharge totale de la batterie et endommager la batterie pendant l'entreposage a long terme.
- Apres avoir change l'interrupteur de position "RUN" a position "TOW", attendre un minimum de 15 seconds avant de le remettre.

YAMAHA ***-K8298-**

6

DATE OF CONSTRUCTION: ***. **** MY****
YAMAHA MOTOR CO., LTD.
2500 SHINGAI, IWATA, JAPAN
COUNTRY OF ORIGIN: USA
MAX. BATTERY WEIGHT: *** kg MODEL: ****** ***
NOMINAL SYSTEM VOLTAGE: **V MAX. POWER: *.* hp (*.* kW)
WEIGHT (NO BATT): ***.* kg
VEHICLE LOAD CAPACITY: *** kg PER SEAT, ** kg BAGWELL
PERSONAL TRANSPORT VEHICLE ***-F4236-**

7

Contact Information
https://global.yamaha-motor.com
***-F151A-**

8

⚠ WARNING

Improper tire pressure or overloading can cause loss of control. To reduce the risk of accidents and injury or DEATH:

- Operating tire pressure: set with tires cold.

Tire size	Recommended Front	Recommended Rear
205/65-10, 4ply	151 kPa, 22 psi	151 kPa, 22 psi
18x8.50-8, 4ply	137 kPa, 20 psi	137 kPa, 20 psi

YAMAHA ***-F1696-**

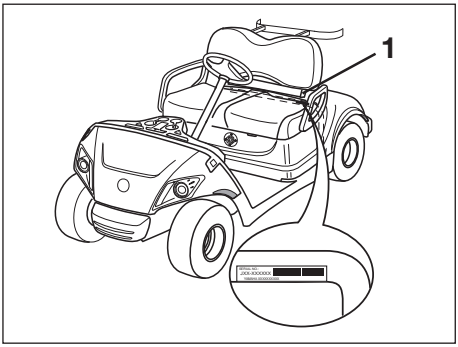

1. Vehicle serial number

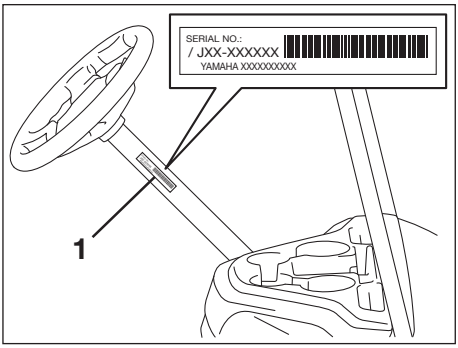

1. Vehicle serial number

SERIAL NUMBER

The serial number is identified in the location shown.

TIP

The first three digits of the serial number are for model identification; the remaining digits are the unit production number. Keep a record of these numbers for reference when ordering parts from a Yamaha dealer.

Serial number:

Yamaha PTVs are designed to be simple to operate. However, be sure to observe the following to reduce the risk of serious injury or death due to loss of control and other hazards:

BEFORE OPERATING THE PTV

- Read this Owner's/Operator's manual and all safety and instruction labels on the PTV before operating.
- Perform the pre-operation checks found in Section 4 of this manual.
- Only authorized people should drive the PTV, from the driver's side only, and only in designated areas.
- Do not allow more than two occupants per seat. This PTV is restricted to two occupants unless equipped with a rear seat.
- Do not operate the PTV while under the influence of alcohol or drugs; their effect on vision and judgment make operating a PTV dangerous.
- Do not operate the PTV on public streets, roads or highways unless allowed by law or local regulating authority.

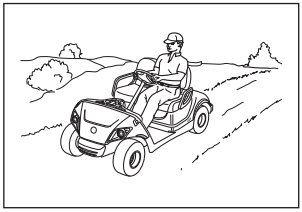

WHILE OPERATING THE PTV

- Keep your entire body inside the PTV, remain seated, and hold on when the car is in motion.
- Do not start the PTV until all occupants are seated.
- Keep your hands on the steering wheel and your eyes on the path ahead.
- Use extra care in congested areas or when backing up. Always back up slowly, and watch carefully.
- Avoid starting or stopping abruptly.
- Vary the speed of the PTV to match the terrain.
- Avoid turning the steering wheel too sharply at higher speeds to avoid tipping or rolling the vehicle.

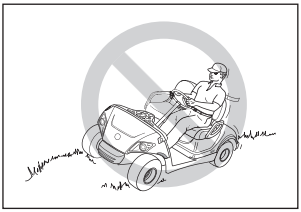

- Always drive slowly straight up or straight down slopes – never at an angle to avoid tipping or rolling the vehicle.
- Do not make any modification or addition which affects capacity or safe operation, or make any changes not in accordance with the owner's/operator's manual.
- In the event that an accident occurs and a person is injured, perform rescue operations first. Next, immediately perform required steps, such as calling for an ambulance.

Like all machines, PTVs can cause injury if improperly used or maintained.

Experience has shown that PTVs are safe when operated in accordance with the safety warnings affixed to every PTV.

DRIVER QUALIFICATIONS

Allow only authorized people to operate PTV. It is recommended that only people who possess a valid motor vehicle driver's license be allowed to operate PTV.

⚠ WARNING

Do not operate PTVs when under the influence of alcohol or drugs. Death or serious personal injury can result from failing to comply with the safety and warning instructions affixed to the PTV.

HAZARD PREVENTION

Drivers should be mindful of road hazards, and avoid dangerous situations that may include the following:

- **Steep Grades** – Where steep grades exist, restrict PTV to designated roadway or path, and descend slowly with foot on the brake.

⚠ WARNING

Descend steep grades slowly with foot on brake. Death or serious personal injury can result from failing to comply with the safety and warning instructions affixed to the PTV.

- **Sharp Turns, Blind Corners and Bridge Approaches** – Adhere to all warning signs and take proper precautions to avoid the hazard.
- **Wet Areas** – Wet grass may cause a PTV to lose traction and may affect stability. Vehicle operators should reduce speed in wet areas or during periods of inclement weather. Never operate the vehicle water flooded area. That wet the brakes may have reduced stopping ability.

- **Loose Terrain** – Avoid areas of loose terrain which may cause a PTV to lose traction and affect stability. Take notice of conditions and reduce speed when driving on uneven or loose terrain.
- **Pedestrian Areas** – Avoid areas with pedestrian traffic or congested areas whenever possible to prevent accidents. If it is impractical to avoid these areas, always remember that pedestrians have the right of way. When approaching pedestrian or congested area always reduce speed, drive slowly, use caution and watch for pedestrians.

MAINTENANCE REQUIRED FOR PTV SAFETY

Practice the following to help ensure the safety of PTV occupants:

- **Preventative Maintenance.** Perform all scheduled maintenance in accordance with manufacturer's recommendations to provide a safe, properly operating PTV.
- **Personnel.** Allow only qualified trained, and authorized personnel to inspect, adjust and maintain PTVs.
- **Parts and Materials.** Use only replacement parts and materials recommended by the manufacturer.
- **Ventilation.** Properly ventilate all maintenance and storage areas in accordance with applicable fire codes and ordinances to avoid fire hazards. Ventilation is required to remove hydrogen gas from electric powered car storage areas during the charging process.

For electric powered PTVs, the amount of hydrogen gas emitted during charging depends on a number of factors, such as the condition of the batteries, the output rate of the battery charger and the amount of time the batteries are on charge. Because of the highly volatile nature of hydrogen gas and its propensity to rise and accumulate at the ceiling in pockets, a minimum of five air changes per hour is recommended. Consult applicable fire and safety codes for the specific ventilation levels requirement, as well as requirements for the use of explosion proof electrical apparatus.

SAFETY PRECAUTIONS DURING MAINTENANCE

When performing maintenance, follow all safety instructions contained in the manufacturer's operation and service manuals, as well as the following safety procedures:

- Properly immobilize PTV before beginning any maintenance to avoid any unexpected vehicle movement.
- Properly block chassis before working underneath PTV to avoid any unexpected vehicle movement.
- When working on the battery, do not smoke, or allow any sparks or open flames near the vehicle, to avoid any fires or explosions.
- Before working on an electric PTV, disable the car's electrical system in accordance with the manufacturer's instructions to avoid electrical shock or damage to the electrical system.
- Use only properly insulated tools when working on electrically powered PTVs or around batteries to avoid electrical shock or damage to the electrical system.
- Maintain all safety devices including brakes, steering mechanisms, warning devices and governors, in a safe operating condition. Do not modify these safety devices as supplied by the manufacturer.

- After each maintenance or repair, the car must be driven by a qualified, trained and authorized person – in an area free of pedestrian traffic – to ensure proper operation and adjustment.
- Record all maintenance performed in a maintenance record log by date, name of person performing maintenance, and type of maintenance. Periodically inspect maintenance log to ensure accurate and complete entries.
- Provide operator comment cards to assist in identifying non-periodic maintenance needs for specific PTVs.
- Maintain in a legible condition all nameplates, warnings and instructions provided by the manufacturer.
- If new nameplates, warnings or instructions are needed, contact your Yamaha dealer.

STORAGE AND BATTERY CHARGING

Take the following precautions to ensure maintenance worker safety:

- Only use battery changing and charging facilities and procedures that are in accordance with applicable ordinances and regulations to avoid explosions, electrical shock or damage to the electrical system.
- Periodically inspect charging facilities and procedures to be certain that applicable safety codes, regulations and procedures are being followed to avoid any fires or explosions.

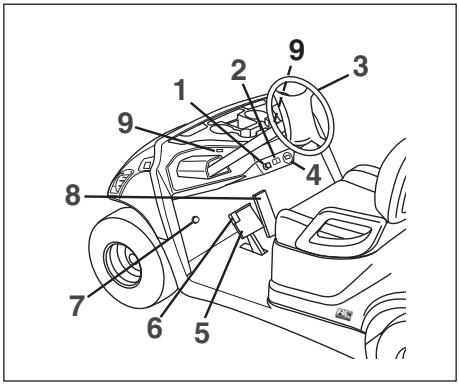

FEATURES

1. Main/light switch
2. Drive select switch
3. Steering wheel
4. Battery gauge
5. Brake pedal
6. Parking brake pedal
7. Horn switch
8. Accelerator pedal
9. USB ports

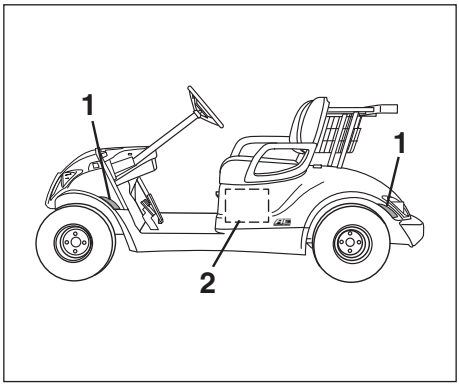

1. Reflector
2. Batteries

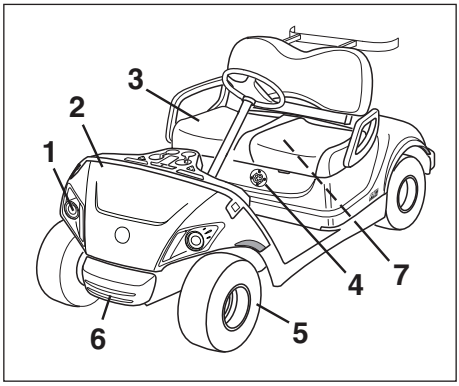

1. Headlights
2. Front body
3. Seat
4. DC charger receptacle
5. Front tire
6. Front bumper
7. Fuses

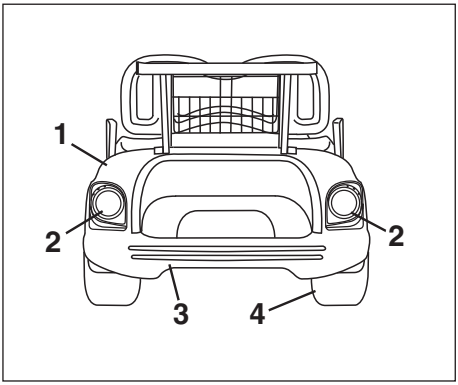

1. Rear body
2. Tail and brake lights
3. Rear bumper
4. Rear tire

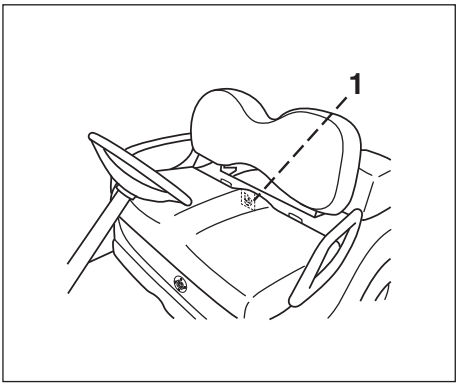

1. Tow switch

MAIN SWITCH

The main switch controls the following items:

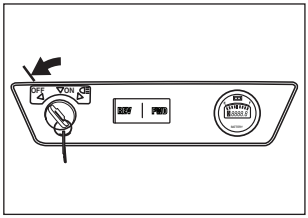

"OFF"
All electrical circuits are switched off (motor controller unit remains energized). The PTV cannot be operated. The key can be removed only in this position.

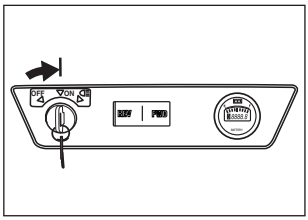

"ON"
Electrical circuits are switched on. The vehicle can be driven.

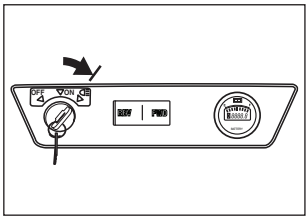

"ON" WITH LIGHTS
The functions for this position are the same as for the ON position; however, this position will activate the headlights and taillights.

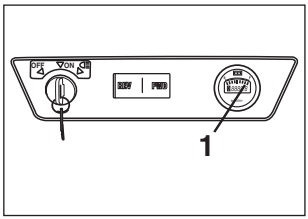

1. Battery gauge

BATTERY GAUGE

The battery gauge displays how much charge is left in the batteries.
When the batteries are at full charge, all the LEDs will be lit.

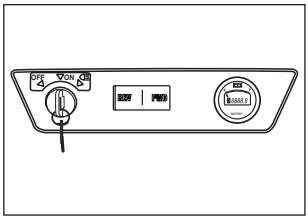

As the battery energy decreases, the LEDs will move to the left toward the "E." When the LED light below the "E" is the only one lit, the batteries must be charged.

Use the table to determine the remaining battery capacity. For example, if 7 of the 9 LED lights are lit, batteries still have approximately 47.4 volts left. When the batteries fall to 43.4 volts or less, 1 LED will blink on and off, meaning the batteries should be charged immediately.

BAR LEVEL	9	8	7	6	5	4	3	2	1	1 BLINK
VOLT	48.95	47.8	47.4	46.9	46.4	46.0	44.8	44.0	43.5	43.4 >

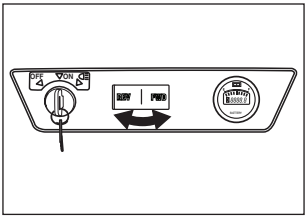

DRIVE SELECT SWITCH

The drive select switch is used to shift the PTV into forward or reverse. After coming to a complete stop, move the switch to the desired position.

Switch Position	Car Movement
FWD	FORWARD
REV	REVERSE

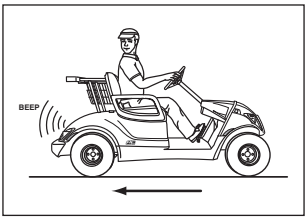

TIP

The reverse alarm will sound when the drive select switch is depressed to the “REV” position.

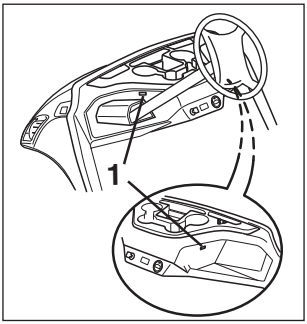

1. USB port

USB PORTS

A USB port is located inside the dash on the driver side and passenger side. These can be used to power or charge USB devices or accessories.

The USB is only powered when the key is in the ON position.

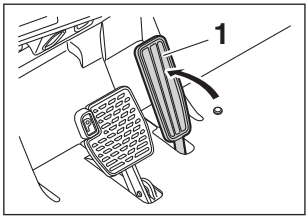

1. Accelerator pedal

ACCELERATOR PEDAL

The accelerator pedal controls the PTV's speed.

Action	Car Speed
Depress pedal	Increase
Release pedal	Decrease

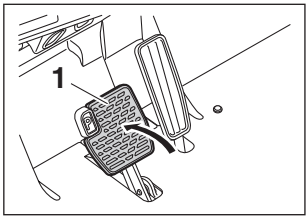

1. Brake pedal

BRAKE PEDAL

Press down on the brake pedal to stop the PTV.
When press down the brake pedal, the brake lights come on.

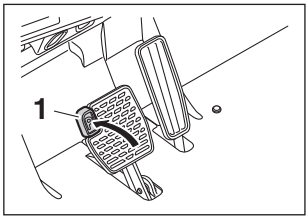

1. Parking brake pedal

PARKING BRAKE PEDAL

Press down on the parking brake pedal whenever parking the PTV.

TIP

Release the parking brake by depressing the accelerator pedal.
The brake lights will automatically turn off after approximately 2 minutes.

⚠ WARNING

The parking brake will automatically release when the accelerator pedal is depressed. If the main switch is in the "ON" position, depressing the accelerator may suddenly cause the PTV to move.

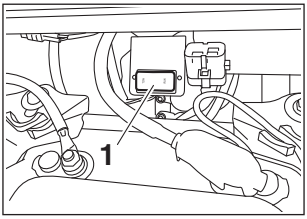

1. Tow switch

TOW SWITCH

Before operating the car, make sure the tow switch is in the “RUN” position.

NOTICE

Ensure that the “Drive Select Switch” is in the “FWD” position and then move the “TOW Switch” to “TOW” before towing.
After moving switch from “RUN” to “TOW,” wait 15 seconds minimum before switching again.
Failure to do so may lead to drive system damage while towing.

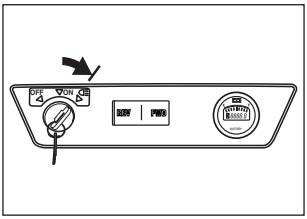

HEADLIGHT/TAILLIGHT ON POSITION

Turn the main switch all the way to the right to the second ON position. This will activate the headlights and taillights.

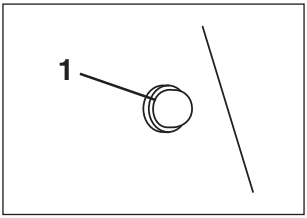

1. Horn Switch

HORN SWITCH

The horn is located adjacent to the brake pedal, and is activated by depressing with your foot.

TIP

It is advisable to sound the horn when approaching blind corners.

Pre-operation checks should be made each time you use your PTV. Get in the habit of performing the following checks in the same way so that they become second nature.

⚠ WARNING

To keep car from moving while performing pre-operation checks:

- **Remove main switch key.**
- **Apply parking brake.**

Death or serious personal injury can result from failing to comply with the safety instructions in this manual.

PRE-OPERATION CHECKS

Refer to the Periodic Maintenance and adjustment charts on pages 22 and 24.

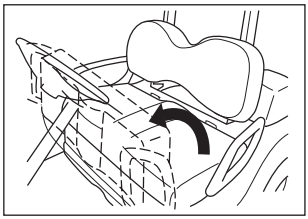

SEAT

Lift up the seat for checking and servicing.

BATTERIES

For Flooded Batteries

Check that the batteries are held securely in place to prevent them from being damaged from vibration or jarring. Also check that no battery caps are missing to prevent battery acid from spilling from the batteries. Check the battery terminals for corrosion and tightness.

⚠ WARNING

Battery electrolyte is poisonous and dangerous, causing severe burns, etc. It contains sulfuric acid. Avoid contact with skin, eyes or clothing. Ventilate when charging or using in enclosed space. Always shield eyes when working near batteries. KEEP OUT OF REACH OF CHILDREN.

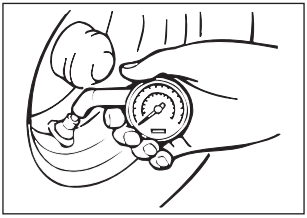

TIRE CONDITION

Tire Air Pressure

Check the tire air pressure before operating the PTV.

Tire pressure:
151 kPa (1.55 kgf/cm^2, 22 psi)

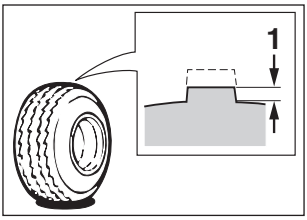

1. Wear limit

Tire Wear Limit

Check the tire surface for damage, cracks or embedded objects. When tire tread wears down to 1 mm (0.04 in.), replace the tire.

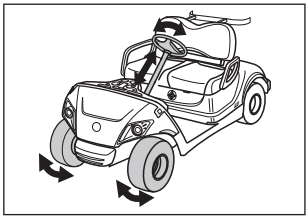

STEERING SYSTEM

Check the steering system for excessive free play by:

- moving the steering wheel up and down, and back and forth.
- turning the steering wheel slightly to the right and left.

If you feel excessive free play, or hear rattling sounds which may indicate loose steering components, consult a Yamaha dealer.

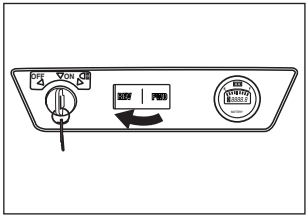

REVERSE ALARM

Check the reverse alarm by moving the drive select switch to “REV” for reverse. The alarm should sound.

PEDAL OPERATION

Check the following pedal controls for proper operation. If a pedal does not work properly, consult a Yamaha dealer.

Accelerator Pedal

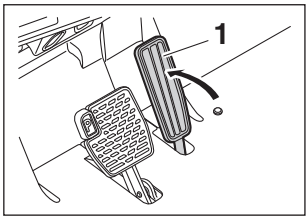

1. Accelerator pedal

WARNING

With the main switch in the “OFF” position, make sure the accelerator pedal operates smoothly.

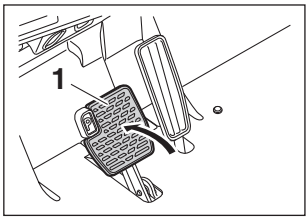

1. Brake pedal

Brake Pedal

Make sure the brake pedal feels firm when pressed and returns to its original position when released.

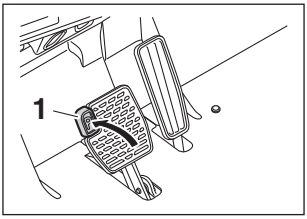

1. Parking brake pedal

Parking Brake Pedal

Make sure the parking brake pedal locks in place with a positive click, and releases when the accelerator pedal is pressed.

TIP

Release the parking brake by depressing the accelerator pedal.

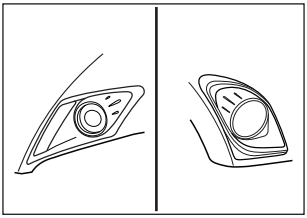

HEADLIGHTS AND TAIL/BRAKE LIGHTS

Ensure the headlights and tail/brake lights are operational.

The brake lights comes on when brake pedal depressed.

WARNING

Never operate the vehicle at night or during inclement weather without properly working headlights and tail/brake lights. Death or serious personal injury can result from failing to comply with the safety instructions in this manual.

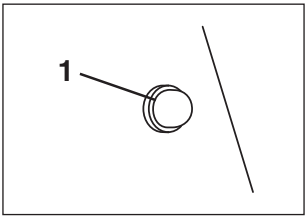

1. Horn switch

HORN SWITCH

Make sure the horn operates correctly.

BODY AND CHASSIS

Before each use, visually inspect the PTV body and chassis for damaged and/or missing parts.

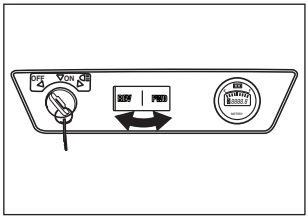

STARTING

1. With the parking brake applied, turn the drive select switch to “FWD” for forward, or “REV” for reverse.

NOTICE

Do not shift from “FWD” (forward) to “REV” (reverse) while the PTV is moving. Transmission damage can result.

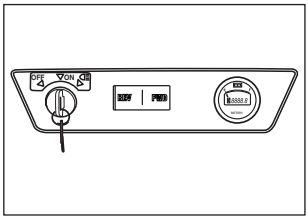

2. Turn the main switch to “ON.”

⚠ WARNING

Do not depress the accelerator pedal when turning on the main switch or the PTV may start moving unexpectedly. Death or serious personal injury can result from failing to comply with the safety instructions in this manual.

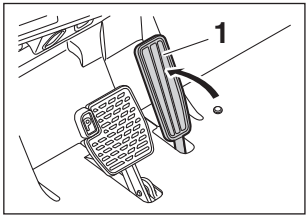

1. Accelerator pedal

3. Check that your path is clear in the direction you plan to go, and slowly depress the accelerator pedal. The PTV will start to move.

TIP

The parking brake automatically releases when the accelerator pedal is depressed.

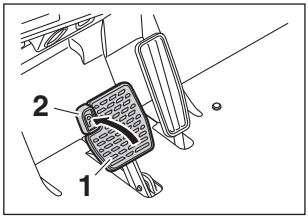

1. Brake pedal
2. Parking brake pedal

STOPPING

To stop the PTV, gradually press down on the brake pedal.

NOTICE

Do not hold the PTV on an incline with the accelerator – use the brake. Transmission damage can result.

When the PTV has come to a stop, apply the parking brake pedal and turn the main switch to “OFF.”

PERIODIC MAINTENANCE AND ADJUSTMENT CHARTS

Regular maintenance is required for the best performance and safe operation of your PTV.

Even if the vehicle isn't driven for the stated mileage or engine hours, the month maintenance intervals should still be followed. Items marked with an asterisk should be performed by a Yamaha dealer as they require special tools, data and technical skills.

WARNING

Be sure to turn off the main switch and apply the parking brake when you perform maintenance, unless otherwise specified. If the owner is not familiar with servicing the machine, death or serious personal injury can result. When in doubt the work should be done by a Yamaha dealer or other qualified mechanic.

NOTICE

Yamaha does not approve the use of high-pressure washers to clean the products they manufacture. Doing so may damage the finish on the body or result in doing other damage not covered by warranty.

CS - CHECK **CA** - CHECK AND ADJUST **R** - REPLACE **S** - SERVICE **CL** - CLEAN AND LUBRICATE **L** - LUBRICATE

	Remarks	Daily Pre-Operation	40 rounds 20 hours 100 miles 160 kms (Every Month)	250 rounds 125 hrs 600 mls 1000 kms (Every 6 months)	500 rounds 250 hrs 1200 mls 2000 kms (Every Year)	1000 rounds 500 hrs 2500 mls 4000 kms (Every 2 years)	2000 rounds 1000 hrs 5000 mls 8000 kms (Every 4 years)	Page
PRE-OP	Charge	S	S	S	S	S	S	10 / 27
	Clean battery tops, check for tightness of hold-down screws and terminals	S	S	S	S	S	S	18 / 25
	Check brake pedal freeplay and adjust if necessary	CS	CA	CA	CA	CA	CA	19 / 44
	Check steering operation	CS	CS	CS	CS	CS	CS	19

* Items without a page number reference should be serviced by a Yamaha dealer or other qualified mechanic. This manual does not contain these procedures. They are contained in the Service Manual.

** Flooded Batteries only

*** Do no operate vehicle if discrepancy is found.

CS - CHECK **CA** - CHECK AND ADJUST **R** - REPLACE **S** - SERVICE **CL** - CLEAN AND LUBRICATE **L** - LUBRICATE

	Remarks	Daily Pre-Operation	40 rounds 20 hours 100 miles 160 kms (Every Month)	250 rounds 125 hrs 600 mls 1000 kms (Every 6 months)	500 rounds 250 hrs 1200 mls 2000 kms (Every Year)	1000 rounds 500 hrs 2500 mls 4000 kms (Every 2 years)	2000 rounds 1000 hrs 5000 mls 8000 kms (Every 4 years)	Page
PRE-OP	Check tire pressure, tread depth, tire surface for damage	CS	CA	CA	CA	CA	CA	18
	Check body and chassis for damage	CS	CS	CS	CS	CS	CS	20
	Check tightness of all bolts, nuts, screws and rivets	CS	CS	CS	CS	CS	CS	*
	Check reverse alarm operation	CS	CS	CS	CS	CS	CS	19
	Check for the proper operation of pedal control area ***	CS	CS	CS	CS	CS	CS	19
	Check the headlight and tail/brake lights operation.	CS	CS	CS	CS	CS	CS	20
EVERY MONTH	Check electrolyte level **		CS	CS	CS	CS	CS	25
	Check for loose or broken connections		CS	CS	CS	CS	CS	*
	Clean/Lube pedal control area		CL	CL	CL	CL	CL	—
EVERY 6 MONTHS	Check all wire insulation for cracks and/or worn spots			CS	CS	CS	CS	*
	• Check brake cable operation • Inspect for abrasions and damage, and replace if necessary			CS R	CS R	CS R	CS R	44
	Check shock absorbers for oil leaks and damaged springs			CS	CS	CS	CS	*

* Items without a page number reference should be serviced by a Yamaha dealer or other qualified mechanic. This manual does not contain these procedures. They are contained in the Service Manual.

** Flooded Batteries only

*** Do no operate vehicle if discrepancy is found.

CS - CHECK **CA** - CHECK AND ADJUST **R** - REPLACE **S** - SERVICE **CL** - CLEAN AND LUBRICATE **L** - LUBRICATE

	Remarks	Daily Pre-Operation	40 rounds 20 hours 100 miles 160 kms (Every Month)	250 rounds 125 hrs 600 mls 1000 kms (Every 6 months)	500 rounds 250 hrs 1200 mls 2000 kms (Every Year)	1000 rounds 500 hrs 2500 mls 4000 kms (Every 2 years)	2000 rounds 1000 hrs 5000 mls 8000 kms (Every 4 years)	Page
EVERY YEAR	Perform a discharge test				S	S	S	*
	Apply battery Terminal protectant				S	S	S	—
	Check rear axle bearing play for roughness or freeplay				CS	CS	CS	*
	Check steering knuckle bushing freeplay / Adjust wheel alignment				CA	CA	CA	*
	Check wheel nut tightness, front wheel bearing play				CS	CS	CS	*
	Check transmission oil level and inspect for leakage				CS	CS	CS	41
	Adjust parking brake release				CA	CA	CA	46
	Inspect pedal components ***				CS	CS	CS	*
EVERY 4 YEARS	Replace transmission oil						R	*
	Inspect brake shoes and adjust or replace if necessary						CA	*

* Items without a page number reference should be serviced by a Yamaha dealer or other qualified mechanic. This manual does not contain these procedures. They are contained in the Service Manual.
** Flooded Batteries only
*** Do no operate vehicle if discrepancy is found.

TIP

Some maintenance items need more frequent service if you drive in unusually wet, dusty, sandy, or muddy areas.

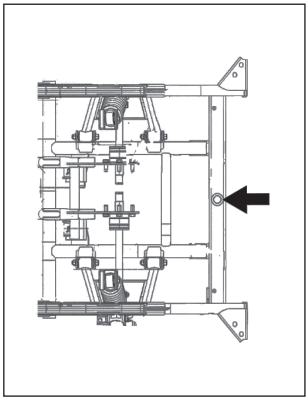

REAR LIFTING POINT

If the rear of the car needs to be lifted for a maintenance procedure, make sure it is lifted at the correct rear lifting point (see arrow).

BATTERY CARE

For Flooded Batteries

⚠ WARNING

Battery electrolyte is poisonous and dangerous, causing severe burns, etc. It contains sulfuric acid. Avoid contact with skin, eyes or clothing.
Antidote:
EXTERNAL: Flush with water.
INTERNAL: Drink large quantities of water or milk. Follow with milk of magnesia, beaten egg, or vegetable oil. Call physician immediately.
EYES: Flush with water for 15 minutes and get prompt medical attention.
Batteries produce explosive gases.
Keep sparks, flame, cigarettes, etc., away.
Ventilate when charging or using in an enclosed space. Always shield eyes when working near batteries.
KEEP OUT OF REACH OF CHILDREN.

Six 8-volt deep cycle batteries provide power for your electric PTV and must be properly maintained and recharged for maximum performance and service life.

To maintain your batteries:

1. Clean the tops of the batteries with a solution of baking soda and water, as necessary, to remove corrosion.

NOTICE

Do not allow cleaning solution to enter battery cells. Serious battery damage can result.

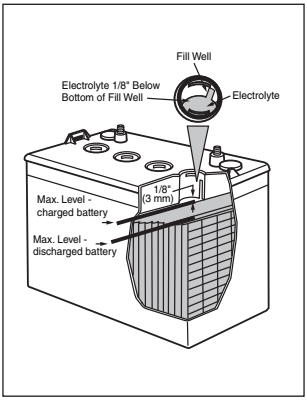

2. Check the fluid level before and after charging.

- **Before charging:** only add distilled water if fluid is below the top of the plates, and then add just enough to cover plates.
- **After charging:** open the vent caps and look inside the fill wells. Add distilled water until the electrolyte level is 3 mm (1/8”) below the bottom of the fill well. A piece of rubber can be used safely as a dipstick to help determine this level. Clean, replace and tighten all vent caps.

NOTICE

Normal tap water contains minerals which are harmful to a battery; therefore, refill only with distilled water.

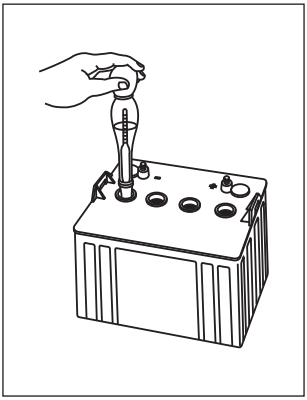

3. Using a hydrometer, check the specific gravity of the battery fluid in each cell against the readings on the chart below. Consult a Yamaha dealer if any low readings are found, or if readings vary more than one point between cells.

Temperature		Satisfactory Uncorrected Hydrometer Reading
°C	°F	
48.9	120	1.244
43.3	110	1.248
37.8	100	1.252
32.2	90	1.256
26.7	80	1.260
21.1	70	1.264
15.6	60	1.268
10.0	50	1.272
4.4	40	1.276
-1.1	30	1.280

BATTERY CHARGING

WARNING

Read and understand the owner's manual provided with your PTV's battery charger before charging batteries. Death or serious personal injury can result from failing to comply with the safety instructions in this manual.

WARNING

Explosive hydrogen gas is produced while batteries are being charged. Only charge batteries in well ventilated areas (a minimum of five air changes per hour is recommended). Death or serious personal injury can result from failing to comply with the safety instructions in this manual.

To charge the batteries in your PTV, follow the instructions contained in your battery charger's owner's manual. The following is a summary of the charging steps.

NOTICE

Do not attempt to recharge your PTV's batteries without thoroughly reading and understanding the owner's manual provided with your charger.

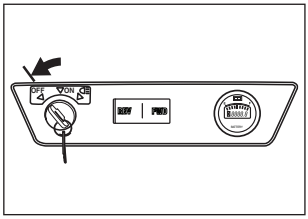

1. Turn main switch key to "OFF" position.

NOTICE

Always put the tow switch in the "TOW" position before charging battery or damage to the electrical system may result.

2. Lift up the seat and move the tow switch to the TOW position.

NOTICE

Use only battery chargers that are rated for use with 48-volt Yamaha PTVs. Serious battery damage can result. Thoroughly read and understand the user manual supplied with your 48-volt charger.

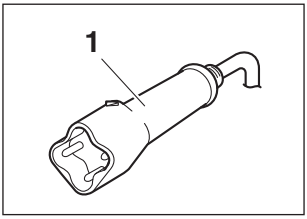

1. DC output plug for Flooded batteries

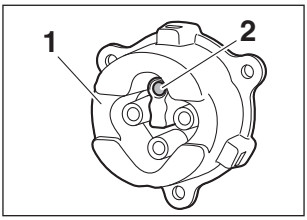

1. Receptacle for Flooded batteries
2. Dummy pin

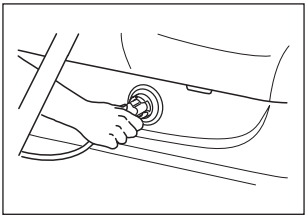

3. Check the DC output code and plug for damage.

4. With the charger properly connected and grounded (see charger's owner's manual), insert the DC output into the DC charger receptacle.

⚠ WARNING

Do not disconnect the DC output cord from the DC charger receptacle when the charger is on or an arc could occur that may cause an explosion.

NOTICE

Do not insert the DC plug into receptacle of the wrong battery type. DC plug or receptacle damage can result. See the identification procedure on page 27.

5. The charger will turn off automatically when the batteries reach full charge.
6. After the charger has turned off, disconnect the DC output plug from the DC charger receptacle by grasping the plug body and pulling the plug straight out of the receptacle.

BATTERY INSTALLATION

⚠ WARNING

When working with batteries, do not put wrenches or other metal objects across the battery terminals. An arc can occur causing explosion of the battery.

For Flooded Batteries

1. Install the battery hold-down plates and torque to 7-9 N·m (0.7-0.9 kgf·m, 5.2-6.6 lb·ft) as shown.
2. Connect the wire leads and torque to 9-10 N·m (0.9-1.0 kgf·m, 6.6-7.4 lb·ft) as shown.

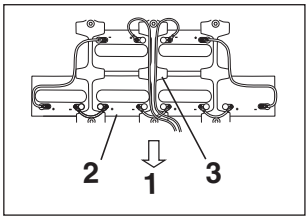

1. Forward
2. Battery
3. Battery hold-down plate

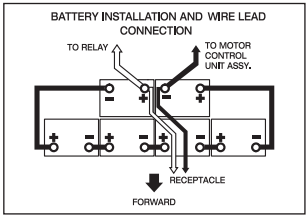

⚠ WARNING

When installing batteries:

- **Carefully place battery cables and hold-downs making sure that cables do not lay across vent caps.**
- **Always remove the negative (–) cable to the motor controller first and install it last. A spark can occur causing an explosion or fire at the battery.**

NOTICE

Do not over-tighten the battery hold-down nuts. Excessive force will damage the battery casing.

FUSE REPLACEMENT

WARNING

Be sure to use the specified fuse. Using a wrong fuse can cause electrical system damage and create a fire hazard. Death or serious personal injury can result from failing to comply with the safety instructions in this manual.

NOTICE

When replacing a fuse be sure the main switch is turned off to prevent accidental short-circuiting and electrical system damage. Put tow switch in the tow position.

The fuse holder is located under the seat. (next to the tow switch)

To access the fuse holder

1. Lift up the seat (see page 17).
2. Locate the fuse holder next to the tow switch.

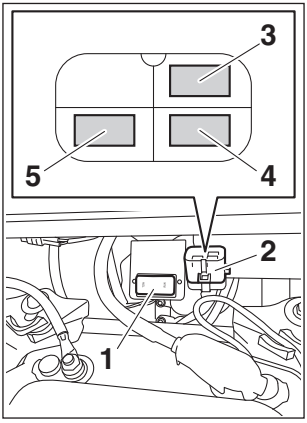

1. Tow switch
2. Fuse holder
3. USB Mini fuse (5.0A 32V)
4. Main Mini fuse (10.0A 58V)
5. MCU Mini fuse (3.0A 58V)

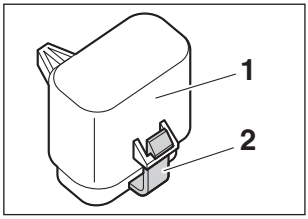

1. Fuse holder cover
2. Locking tab

3. Depress the locking tab of the fuse holder, and then remove the fuse holder cover.
4. Pull the fuse out and inspect it. Replace the fuse if necessary.
5. Install the fuse holder cover.
6. Close the seat.

BATTERY CHARGER

Prepare for Emergencies

Be prepared for possible injury or fire.

Keep the following items handy:

- First aid kit
- Fire extinguisher
- Emergency phone numbers

Read the text located on the case of the charger before operating or using the charger.

Features

Switch-Mode Design: High-efficiency operation with smooth, ripple-free DC output.

10-LED Display: Displays state of charge and charge error conditions.

Charge Protection: Protects from improper connection, overload and excessive temperatures.

Programmed safety features include charge time monitoring and over temperature protection.

Charge Algorithm: Designed for maximum battery life of Trojan 48V batteries.

Pre-Test: Performs several diagnostic tests before charging begins.

Multi-Charge Steps: Ensures a consistent and repeatable charge.

Step 1: Pre-test: Tests several conditions before charging begins. If a problem is detected, charging is terminated.

Step 2: Constant Current Step: Battery is charged with full rated output current, restoring up to 80% of charge.

Step 3: Constant Voltage Step: Regulated voltage "equalizes" individual battery cells, resulting in full charge delivered to the battery.

Step 4: Topping Off Step: Battery pack is brought slowly to full charge without excess gassing.

Step 5: Storage: Every 14th day and if voltage becomes less than 48V, charger restarts cycle to refresh batteries in storage.

Automatic Battery Equalization (Boosting): Automatically boosts battery pack when individual cell-voltages are not balanced and restores pack capacity.

INSTALLATION

The AC line connected to the charger must be capable of supplying 12 Amperes to the charger. **AVOID** connecting a charger and another device to a single 15A/20A circuit or the circuit may become overloaded.

Also, maximum Ampere varies depending on AC voltage. Please refer to "AC Input" in General Specifications.

⚠ WARNING

RISK OF FIRE - Use this charger only on circuits with a 15-amp or higher branch circuit protection (circuit breaker or fuse) in accordance with the national electrical code, ANSI/NFPA 70 and all applicable local codes and ordinances.

When using an extension cord, use only a grounded, 3-wire, 12-AWG cord no longer than 15 m (50 ft.). The use of an improper extension cord could result in a risk of a fire or electric shock.

⚠ WARNING

The output of chargers with greater than 48 volts may pose an energy and/or shock hazard under normal use.

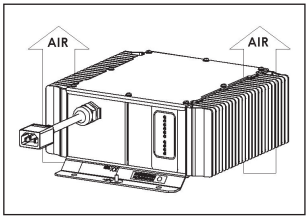

MOUNTING

WARNING

This charger is not designed for on-board use. Improper mounting or installation could result in a risk of fire or damage to the PTV.

Mount the charger on a shelf or on the wall with adequate ventilation.
Ideally it will be mounted horizontally with airflow from below. If it will be mounted vertically, it is recommended that the AC-input cord be at the lower end of the charger.
Keep the charger free of oil, dirt, mud or dust to keep the cooling fins operating as efficiently as possible.
Mount the charger by the mounting plate using appropriate fasteners.

TIP

The charger's AC plug must be located at least 46 cm (18 in.) above the ground and the display visible to the user.

WARNING

Chargers can ignite flammable materials and vapors. Do not use near fuels, grain dust, solvents or other flammables.

GROUNDING

The battery charger must be grounded to reduce the risk of electric shock. The charger is equipped with a 3-prong AC cord set. The AC cord set must be connected to an appropriate receptacle that is properly installed and grounded in accordance with the National Electrical Code and all local codes and ordinances.

⚠ WARNING

Improper connection of the equipment-grounding conductor can result in a risk of an electric shock.

The conductor with insulation that has an outer surface that is green, with or without yellow stripe(s), is the equipment-grounding conductor. If repair or replacement of the charger's AC cord set is necessary, do not connect the equipment-grounding connector to a live terminal.

CHARGING

⚠ WARNING

To reduce the risk of an electric shock, connect only to a properly grounded, single-phase (3-wire) outlet. Also, refer to grounding instructions.

⚠ WARNING

Risk of electric shock! Do not touch any uninsulated parts of the charger output plug, DC charger receptacle or battery terminals.

⚠ WARNING

Surfaces may be hot. To avoid risk of burns, do not touch.

NOTICE

Charge only 48-volt battery systems manufactured by Trojan Battery Company. Damage to the charger and batteries may result if this charger is used on the wrong battery type.

⚠ WARNING

Visually and manually inspect to verify that the DC output cord, plug and battery charging receptacle are in good working condition before each and every use. Do not use the charger under any of the following conditions:

- **The DC charging receptacle does not grip the DC cord set plug tightly, is loose or does not make a good electrical connection.**
- **The DC cord set plug or charging receptacle feels hotter than normal.**
- **The DC cord set plug or charging receptacle contacts are bent, corroded, or are dark or bluish in appearance.**
- **The DC cord set plug, cords, receptacle or equipment-charging wiring are cut, worn, broken or have any exposed conductors.**
- **The DC cord plug, cords, charger or receptacles are damaged or distressed in any way.**

Using the charger with any of the above symptoms could result in a fire, property damage or personal injury.

⚠ WARNING

Do not disconnect the DC cord set plug from the DC charger receptacle when the charger is on. If the charger must be stopped, first disconnect the AC power supply cord from its AC outlet, and then disconnect the charger DC cord set plug from the DC charger receptacle.

⚠ WARNING

Whenever removing AC or DC cord set plugs from receptacles, pull from the plug body and not from their respective cords.

The instructions printed on the charger (shown below) are for daily reference. The charger is factory preset for use with Trojan 48-volt PTV batteries.

OPERATING INSTRUCTIONS

1. PLUG AC CORD INTO A GROUNDED RECEPTACLE
2. PLUG DC CORD INTO DC CHARGER RECEPTACLE
3. CHARGE CYCLE WILL BEGIN AFTER A FEW SECONDS AND AMMETER WILL TURN ON
4. CHARGER SHUTS OFF AUTOMATICALLY WHEN BATTERIES ARE CHARGED

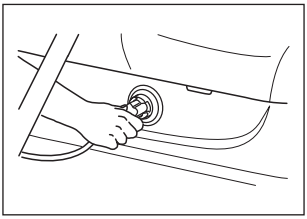

Connect charger's AC cord set to AC power. Then, connect the DC cord set plug to the vehicle charging receptacle by grasping the plug handle and pushing the plug straight into the DC charger receptacle. The charger will start automatically.

Upon connection to AC power source, the lower four LEDs come on as a Power-On Self-Test, then the AC power LED turns on. Upon connection to battery pack, output indicators turn on to indicate charging is active.

MAINTENANCE AND ADJUSTMENT

Under normal charge circumstances, the LEDs operate as follows:

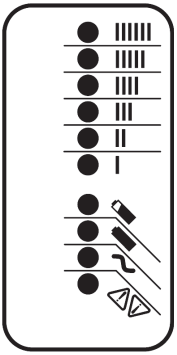

Ammeter (Amber)	**On:**	Displays approximate scale of current output during Step 2.
	Blinking:	High internal charger temperature. Current output reduced.
80% Charge (Amber)	**On:**	Charge Algorithm Step 2 complete, >80% charged and in Step 3.
	Blinking:	With no battery connected, the number of flashes indicates algorithm #93 for Trojan 48V batteries.
100% Charge (Green)	**On:**	Charging complete. Charger in Storage Mode, Charge Algorithm Step 5.
	Blinking:	Charge Algorithm Step 3 complete, in Step 4.
AC On (Amber)	**On:**	The AC power is good.
Fault (Red)	**Blinking:**	Charger error. Refer to **Troubleshooting** on next page.

To reset charger after 100% charge (Green LED), disconnect the DC plug from battery for more than 30 seconds. Then, reconnect DC plug.

TROUBLESHOOTING

1. LED Error Codes (For Battery Condition)

WARNING

Incorrect reassembly may result in a risk of electric shock or fire. The following procedures are intended only to determine if a malfunction may exist in the charger.

WARNING

To reduce the risk of electric shock, always disconnect the charger's AC cord set plug from AC power and its DC cord set plug from batteries before attempting any maintenance or cleaning.

WARNING

Do not operate the charger if it is malfunctioning. Personal injury or property damage could result.

MAINTENANCE AND ADJUSTMENT

If a fault occurs, count the number of red flashes between pauses and refer to the table below:

Red Flashes	Cause	Solution
	Battery High Voltage	Check battery size and condition and reset charger (remove the DC cord from the vehicle for 15 seconds).
	Battery Low Voltage	Check battery size and condition and reset charger (remove the DC cord from the vehicle for 15 seconds).
	Charge Timeout caused by battery pack not reaching required voltage.	Check connections. Check Battery fluid levels.
	Charger output was reduced due to high temperatures.	Operate charger at a lower ambient temperature.
	Check Battery: Battery could not be trickle charged up to minimum voltage.	Check Battery fluid levels. Check for shorted or damaged cells.
	Over-Temperature: Charger shut down due to high internal temperature.	Ensure sufficient cooling air flow and reset charger (remove the DC cord from the vehicle for 15 seconds).
	Charger Internal Fault	Reset charger (Remove AC power or the DC connection for 15 seconds). Return to a qualified service depot if the fault persists.

WARNING

Have qualified service technician inspect if problems persist.

2. Hardware System Faults

Problem Description	Cause	Remedy
Charger does not start. No LEDs illuminate or blink when AC cord is connected.	No AC power to charger.	Ensure correct voltage at AC outlet. Check AC cord connections. Replace AC cord if damaged.
Charger does not start charging when DC cord set is plugged into charger receptacle and the Amber AC On LED is illuminated.	Incorrect wiring or disconnection from DC cord, charger receptacle and batteries. Battery voltage less than 20 Volts.	Ensure polarity for wiring is correct from DC cord, charger receptacle and batteries. Check battery pack voltage.
Charger runs longer than 20 hours.	Charger may be in “boosting” stage.	Confirm Green 100% LED is blinking. (This indicates boosting.)

WARNING

Have qualified service technician inspect if problems persist.

TRANSMISSION OIL

To check the transmission oil level:

1. Place the PTV on a flat, level surface.
2. Remove two bolts and remove the rear floor cover.
3. Place an oil pan under the transmission case.

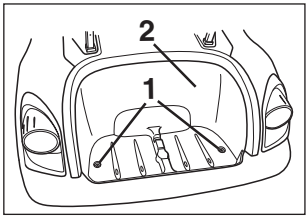

1. Bolt
2. Rear floor cover

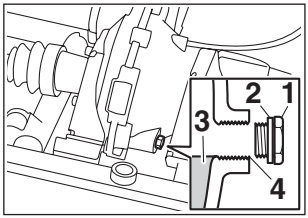

1. Transmission oil filler bolt
2. O-ring
3. Transmission oil
4. Correct oil level

4. Clean the area around the transmission oil filler bolt, and then remove the bolt.

NOTICE

Do not allow foreign material to enter the transmission. Serious damage can result.

5. The oil level should be up to the brim of the transmission oil filler hole.
6. If the level is low, add sufficient oil of the recommended type to raise it to the specified level.

Recommended oil brand:

YAMALUBE®

Available viscosity index:
SAE 80W-90 or SAE 90

Transmission oil change quantity:
475 cc (475 mL, 0.50 US qt)

7. Allow excess transmission oil to flow out of the hole until it stops.
8. Check the O-rings for damage, and replace them if necessary.
9. Install the transmission filler bolt.

Transmission oil filler bolt tightening torque:
16 N·m (1.6 kgf·m, 12 lb·ft)

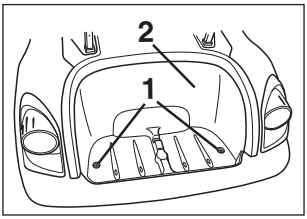

1. Bolt
2. Rear floor cover

10. Install the rear floor cover and secure with two bolts.

To replace the transmission oil:

1. Place the PTV on a flat, level surface.
2. Remove two bolts and remove the rear floor cover.

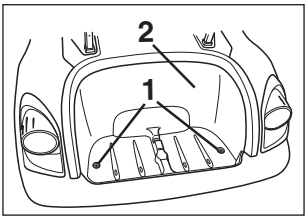

1. Bolt
2. Rear floor cover

3. Remove the four bolts and remove the transmission cover.
4. Place an oil pan under the transmission case to collect the used oil.

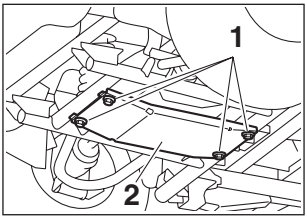

1. Bolt
2. Transmission cover

5. Clean the area around the transmission oil filler bolt and transmission oil drain bolt.
   Remove the transmission oil filler bolt, the transmission oil drain bolt, and their O-rings to drain the oil.

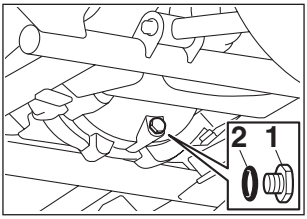

1. Transmission oil drain bolt
2. O-ring

NOTICE

Do not allow foreign material to enter transmission. Serious transmission damage can result.

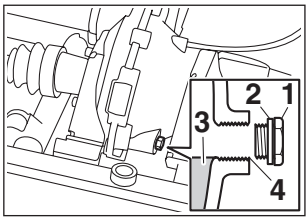

1. Transmission oil filler bolt
2. O-ring
3. Transmission oil
4. Correct oil level

6. Check the O-rings for damage, and replace them if necessary.
7. Install the transmission oil drain bolt and its O-ring, and then tighten the bolt to the specified torque.

Transmission oil drain bolt tightening torque:
16 N·m (1.6 kgf·m, 12 lb·ft)

8. Refill the transmission case with the recommended oil.
   Allow excess transmission oil to flow out of the hole until it stops.

Recommended oil brand:

YAMALUBE®

Available viscosity index:
SAE 80W-90 or SAE 90
Transmission oil change quantity:
475 cc (475 mL, 0.50 US qt)

9. Install the transmission oil filler bolt and its O-ring, and then tighten the bolt to the specified torque.

Transmission oil filler bolt tightening torque:
16 N·m (1.6 kgf·m, 12 lb·ft)

10. Install the transmission cover and secure with four bolts, and then install the rear floor cover and secure with two bolts.

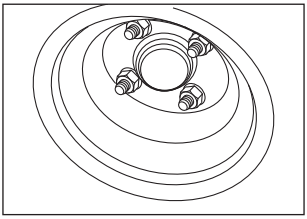

WHEEL REPLACEMENT

WARNING

Before performing wheel or brake maintenance, verify that the main switch is in the "OFF" position. Accidental starting of the vehicle could cause the vehicle to move, causing death or serious personal injury.

To remove and install a wheel on your PTV:

1. With the wheels blocked to prevent the PTV from moving, loosen the wheel nuts.
2. Elevate the PTV with a suitable jack and remove the wheel nuts and the wheel.
3. Reverse the removal steps when installing the wheel.

Wheel nut tightening torque:
100 N·m (10 kgf·m 74 lb·ft)

BRAKE ADJUSTMENT

The brakes on your PTV are selfadjusting.
Before you operate the PTV, press down on the brake pedal several times to make sure the brakes are functioning properly.

WARNING

Consult your Yamaha dealer before using your PTV if you suspect brake problems. Brake failure could result in a serious accident.
Death or serious personal injury can result from failing to comply with the safety instructions in this manual.

BRAKE PEDAL FREE PLAY ADJUSTMENT

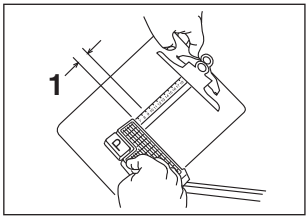

1. Brake pedal free play

Check the brake pedal free play by pressing against the pedal with two fingers (using light force) and measuring the distance the pedal travels before resistance is felt.

Brake pedal free play:
50-55 mm (1.97-2.17 in.)

To adjust the brake pedal free play:

1. Remove the floor mat and service lid from the floor of the PTV.

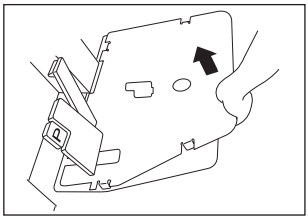

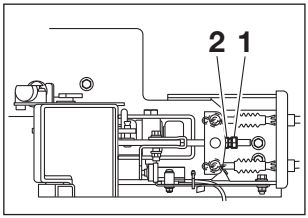

1. Locknut
2. Adjusting nut

2. If the free play distance needs adjusting, loosen the locknut and turn the adjusting nut in or out until the free play specification is met. Then tighten the locknut in place.

⚠ WARNING

Do not over-tighten the brake cables. Over-tightening will increase brake wear and affect overall performance of PTV.
Premature brake wear can result.
Death or serious personal injury can result from failing to comply with the warning labels in this manual.

PARKING BRAKE RELEASE ADJUSTMENT

NOTICE

Before performing parking brake release adjustment, adjust brake pedal free play.

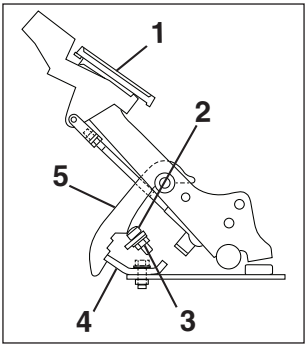

1. Parking brake pedal
2. Bolt
3. Locknut
4. Brake nail
5. Sector

1. Apply pressure to the parking brake pedal until the brake nail catches the first latch position on the sector.
2. Loosen the locknut and turn the bolt counterclockwise until it contacts the sector.
3. Turn the bolt clockwise 1/3 of a turn (120 degrees), then tighten locknut.

REPLACING A HEADLIGHT UNIT

This model is equipped with LED-type headlights.

If a headlight does not come on, replace it as follows:

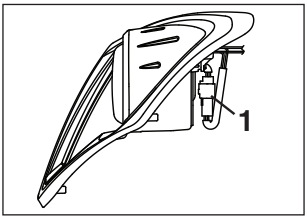

1. Wire connector

1. Disconnect the wire connector from the headlight assembly.

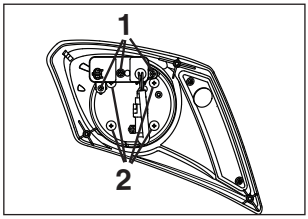

1. Screws (three)
2. Screws (four)

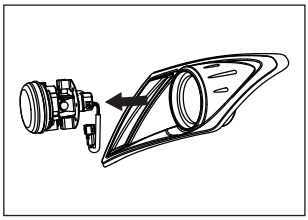

2. Remove the three screws and remove the light control unit.
3. Remove the four screws to remove the headlight assembly from the holder.
4. Remove the headlight assembly from the holder.
5. Install new headlight assembly into holder and secure with the four screws.
6. Install the light control unit and fasten with three screws.
7. Connect the wire connector to the headlight assembly.

ADJUSTING A HEADLIGHT

NOTICE

It is recommended to have the headlight adjustment performed by a Yamaha dealer.

TIP

The screw can be accessed from under the fender.

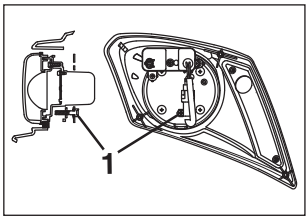

1. Adjusting screw

1. Using a Phillips head screwdriver, turn the adjusting screw.
2. Turning the screw clockwise will lower the beam and turning the screw counter-clockwise will raise the beam.

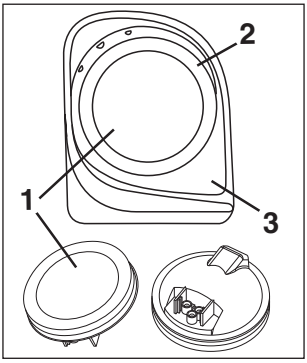

1. Bulb assembly
2. Rubber grommet
3. Bezel assembly

REPLACING A TAIL/BRAKE LIGHTS UNIT

1. If a tail/brake lights does not come on, replace the tail/brake lights unit removing the rubber grommet from the bezel assembly.
2. Remove the wire connector, replace the tail/brake lights unit, and reinstall by fitting the rubber grommet over the tail/brake lights unit and bezel.

Perform the following preparations when storing your PTV for extended periods of time.

NOTICE

Yamaha does not approve the use of high-pressure washers to clean the products they manufacture. Doing so may damage the finish on the body or result in doing other damage not covered by warranty.

TIP

Turn main switch key to “OFF” position, lift seat and put the tow switch in the “TOW” position. Remove key from main key switch, and store key in a safe place.

CHASSIS PREPARATION

1. Verify the tire pressure is set to 151 kPa (1.55 kgf/cm^2, 22 psi).
2. Clean exterior of the PTV and apply a rust inhibitor.
3. Cover the PTV with a breathable cover and store it in a dry, well-ventilated area.

BATTERY PREPARATION

1. Recharge the batteries and check the fluid levels at least once a month.

NOTICE

Do not allow cleaning solution to enter battery cells. Serious battery damage can result.

2. Clean the tops of the batteries with a solution of baking soda and water, as necessary, to remove corrosion.

GENERAL SPECIFICATIONS

Items	DR2 PTV POWERTECH AC IRS
Dimensions:	
Overall length	2380 mm (93.7 in.)
Overall width	1200 mm (47.2 in.)
Overall height (steering height)	1230 mm (48.4 in.)
Overall height (sun top height)	1815 mm (71.5 in)
Height of floor	325 mm (12.8 in.)
Wheelbase	1635 mm (64.4 in.)
Track:	
Front	885 mm (34.8 in.)
Rear	975 mm (38.4 in)
Ground clearance	140 mm (5.5 in.)
Weight:	
Curb weight (With Flooded Battery)	457 kg (1008 lb)
Curb weight (With Sun top, W/S, Flooded Battery)	480 kg (1058 lb)
Noise and vibration levels:	
Noise level at acceleration, Operator's ear	73.1 dB (A)
Noise Level uncertainty of measurement	0.2 dB (A)
Noise level at constant speed, Operator's ear	72.9 dB (A)
Noise Level uncertainty of measurement	0.7 dB (A)
Vibration Level on steering wheel Operator on board (Continuous vibration)	Highest value will not exceed 2.5 m/s^2
Vibration Level uncertainty of measurement	0.0 m/s^2
Vibration level on floor board, Operator on board	Highest value will not exceed 0.5 m/s^2

SPECIFICATIONS

Items	DR2 PTV POWERTECH AC IRS
Vibration Level uncertainty of measurement	0.0 m/s^2
Vibration Level on steering wheel Operator on board (Shock vibration)	109.8 m/s^2
Vibration Level uncertainty of measurement	2.2 m/s^2
Performance:	
Maximum speed	31.4 km/h (19.5 mph)
Maximum reverse speed	10.0 km/h (6.2 mph)
Minimum turning radius	2.9 m (9.5 ft)
Seating capacity	Two occupants per seat
Hill climbing capacity	15°

TRANSMISSION

Items	DR2 PTV POWERTECH AC IRS
Differential/reduction gear	Secondary reduction system helical gear Secondary reduction ratio: Forward 12.44:1; Reverse 12.44:1 Differential type bevel gear Lubricant/capacity SAE 80W-90 or SAE 90 gear oil/475 cc (475 mL, 0.50 US qt)

BATTERIES

Items	DR2 PTV POWERTECH AC IRS
Flooded battery:	Trojan - T-875 (6x8-volt) RC: minimum 117 min
Battery category: **EU Battery Regulation (EU) 2023/1542**	Industrial battery

CHASSIS

Items	DR2 PTV POWERTECH AC IRS
Suspension:	
Front	Independent (Coil-over strut type)
Rear	Independent (Coil-over strut type)
Steering system:	
Type	Rack and Pinion
Steering angle (L.H.)	1.85 turn
Steering angle (R.H.)	1.85 turn
Brakes:	
Brake system	Mechanical drum brake on each rear wheel with self-adjusters
Type of brake	Dual internal expanding shoe Leading/trailing shoes (self-adjusting)
Brake pedal freeplay linkage adjustment	50-55 mm (1.97-2.17 in.)
Parking brake	
Type	Foot type; parking brake with automatic release.
Wheel	
Tire size: (Width [mm]) / (Aspect ratio)-(Rim size [in]) Ply rating)	
Front	205 / 65 - 10 4 PR
Rear	205 / 65 - 10 4 PR
Rim size: (Dia. [in]) × (Width [in]) (Offset [mm])	10 × 6.0 +6
Tire pressure:	151 kPa (1.55 kgf/cm^2, 22 psi)
Lights:	
Headlight	LED
Taillight	12 V BULB

DR2 PTV POWERTECH AC IRS WIRING DIAGRAM

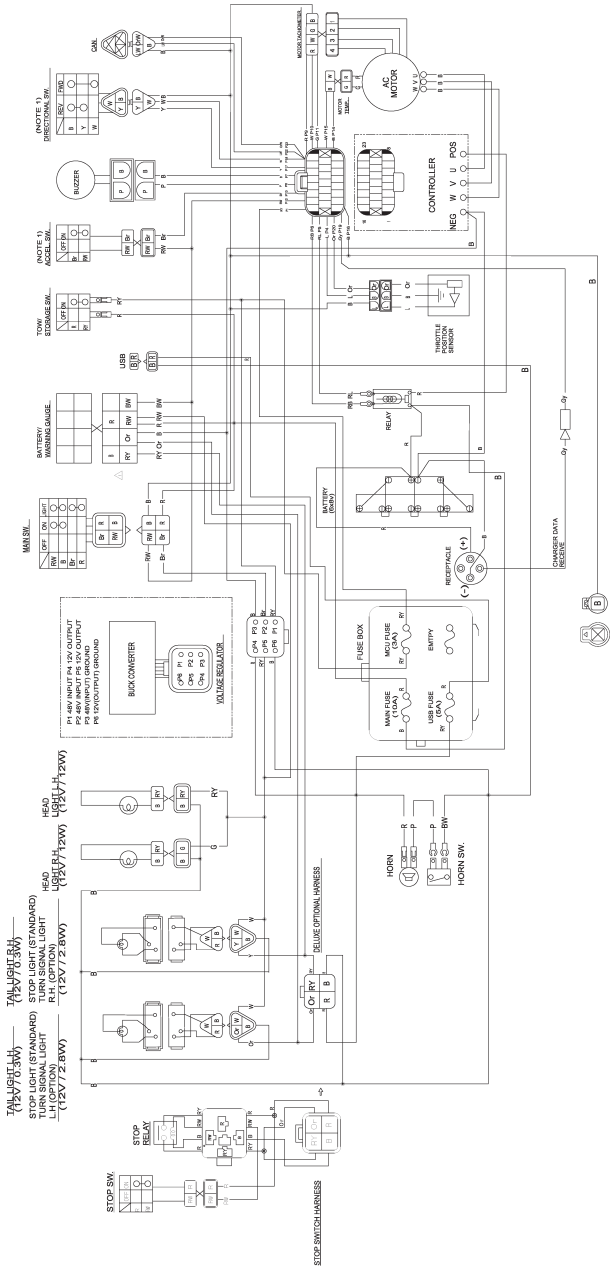

CONTENTS

1 IMPORTANT LABELS

2 ⚠ SAFETY INFORMATION

3 CONTROLS

4 PRE-OPERATION CHECKS

5 OPERATION

6 MAINTENANCE AND ADJUSTMENT

7 STORAGE

8 SPECIFICATIONS

9 WIRING

YAMAHA

PRINTED IN USA
2026.07-0.3×1 CR
(E)